

PART 1 BASE
132 x 58 x 14 | 4-R5
2 HOLES Ø16 | 100 C-C
FORK GAP 32 | EARS 10
PIVOT Ø16 | R20 | HEIGHT 54

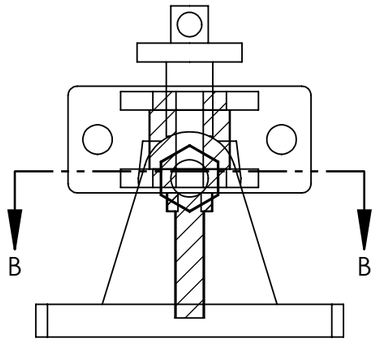

SECTION B-B
SCALE 0.3 : 1

NOTES:
1. ALL DIMENSIONS ARE IN MILLIMETRES.
2. CHAMFER 1x45° UNLESS STATED.
3. GENERAL TOLERANCE ±0.1.

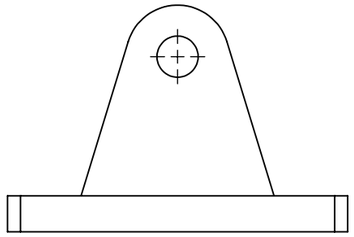

PART 2 SWIVEL
50 HIGH | 32 WIDE | R22
PIVOT Ø16
M20x2.5 BLIND DEPTH 34

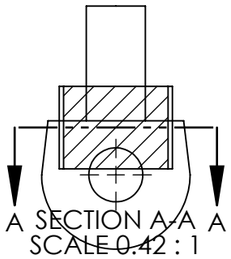

SECTION A-A
SCALE 0.42 : 1

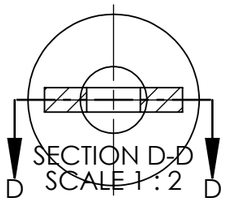

SECTION D-D
SCALE 1 : 2

PART 5 LOCK NUT
Ø45 x 8 | M20x2.5 | KNURLED

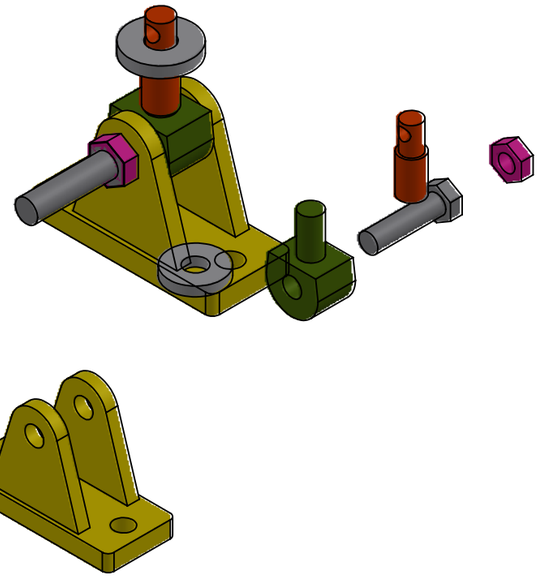

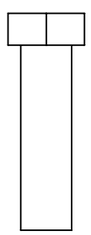

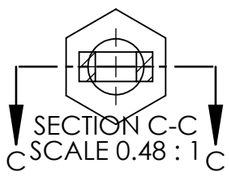

SECTION C-C
SCALE 0.48 : 1

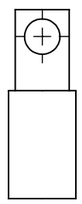

PART 3 BOLT
Ø16 x 68 | THREAD M16x2 x 20
HEAD 10 | R2

PART 4 STANDARD NUT
AF25 x 10 | M16x2 | R2

PART 6 SCREW
56 OAL | M20x2.5 x 32
CROSS HOLE Ø10.5 | 2-1x45°

ITEM NO.	PART NUMBER	QTY.
1	BASE	1
2	SWIVEL	1
3	BOLT	1
4	STANDARD NUT	1
5	LOCK NUT	1
6	SCREW	1

CAD CAM TUTORIAL RECONSTRUCTION

MACHINIST'S JACK
SOLIDWORKS ASSEMBLY

MATERIAL: STEEL AISI 1
SCALE 1:1.5 SHEET 1 O