Drawing the assembly

3D geometry / 2D documentation / Dimensional control

ASSEMBLED

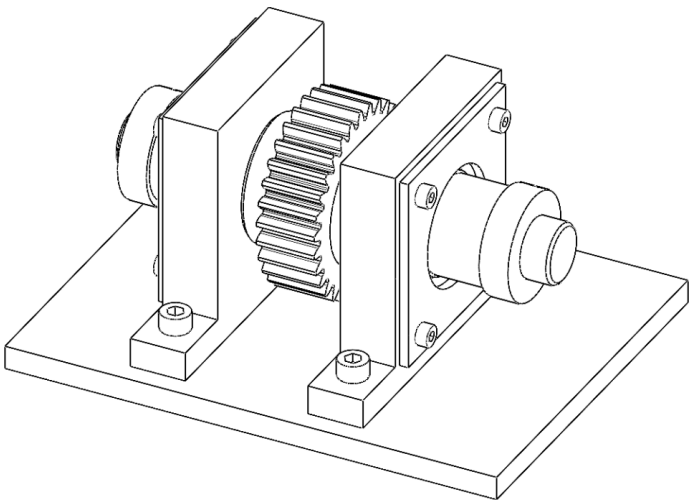

EXPLODED

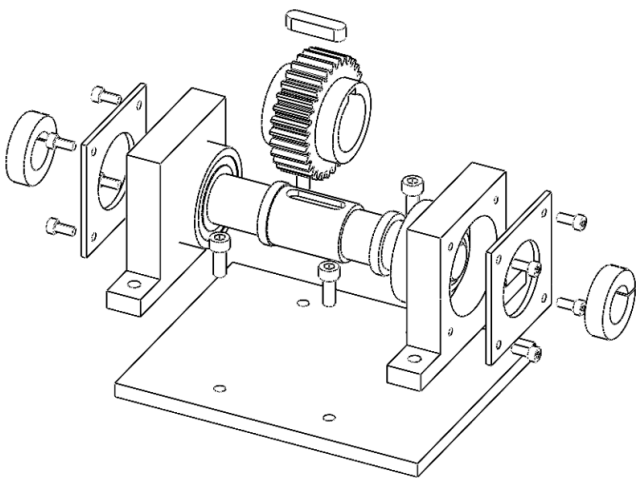

11
DRAWING SHEETS

14
UNIQUE COMPONENT TYPES

29
ASSEMBLY ITEMS

Ramin (Ray) Mashayekhi
M.Sc., M.Eng., EIT
Thermal-Fluid Systems | Energy | HVAC | CFD



From 3D to 2D

Plan, isometric and exploded views of the same CAD geometry.

PLAN VIEW

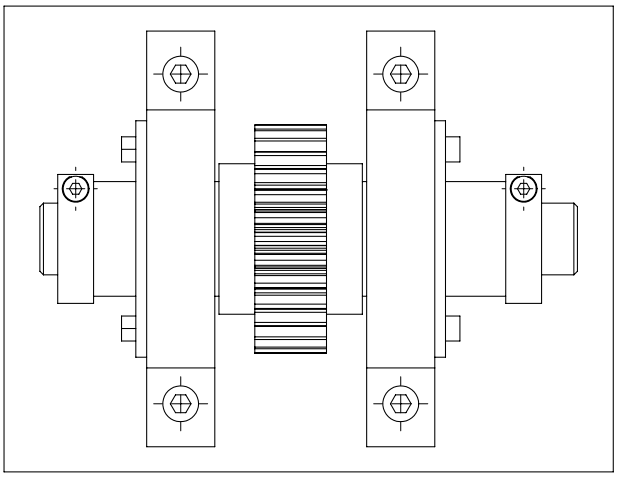

PLAN VIEW 0.85:1

3D ISOMETRIC

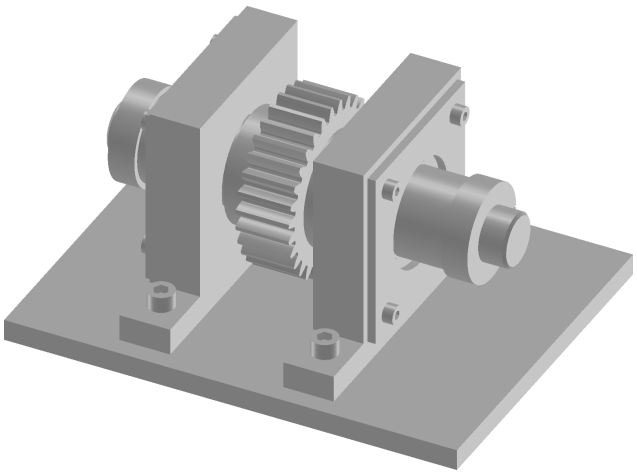

EXPLODED ARRANGEMENT

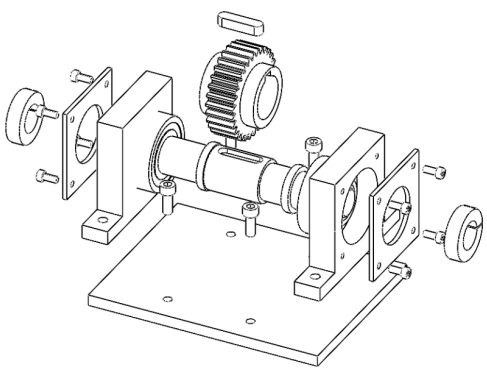

1 shaft + gear + key

2 bearings + 2 supports

2 covers + 3 spacers

2 collars + 1 baseplate

14 retaining fasteners

Assembly geometry: 29 items. Bearings and threads use simplified representations.

Ramin (Ray) Mashayekhi
M.Sc., M.Eng., EIT
Thermal-Fluid Systems | Energy | HVAC | CFD



Stepped shaft

A01B | Axial dimensions, diameter tolerances and keyway geometry

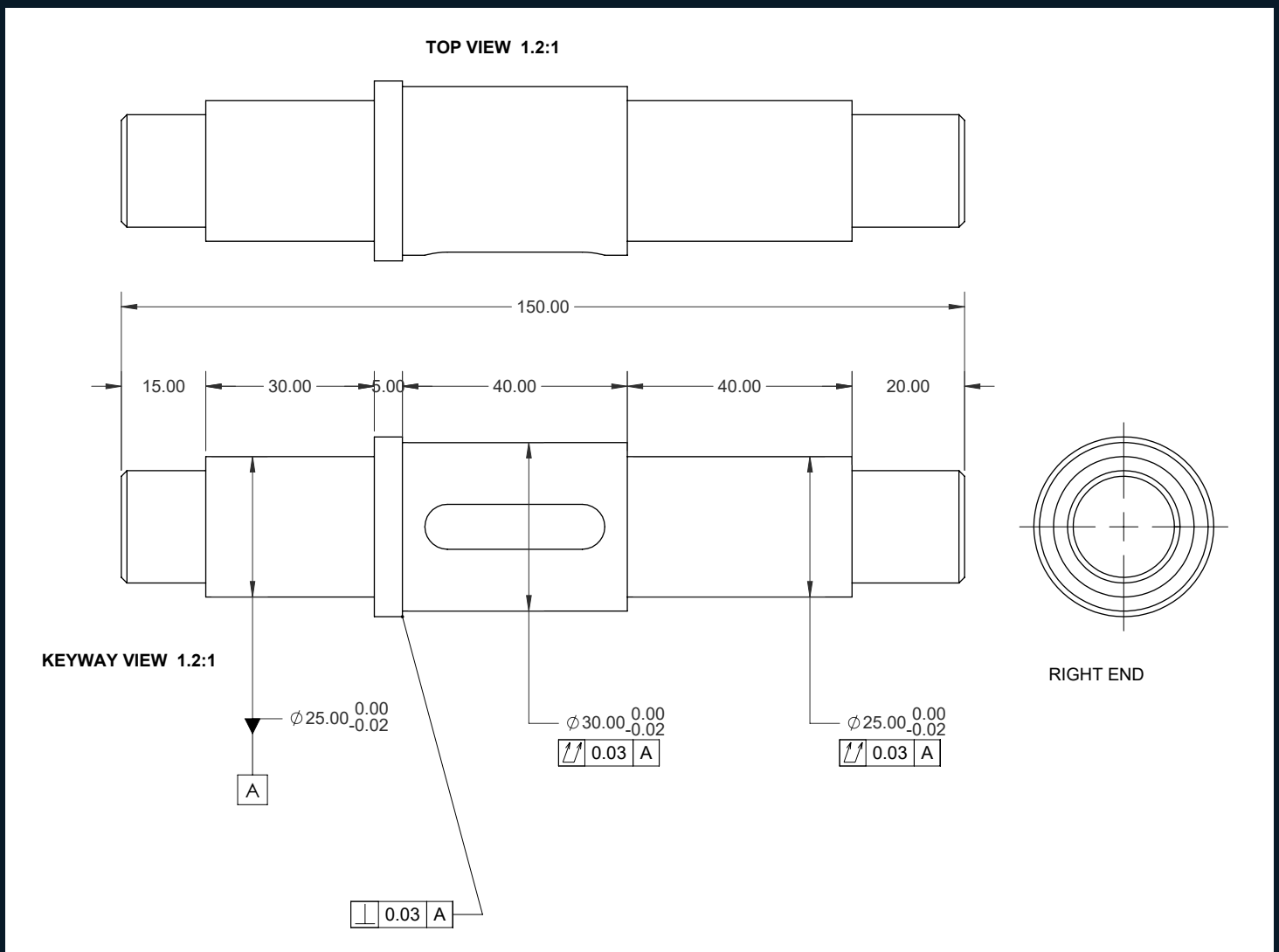

150 mm overall length

8 x 32 mm keyway, R4 ends

4 mm radial depth; 1 x 45° end chamfers

A09 restores the removable right shoulder.

ISOMETRIC



SolidWorks drawing extract - not to scale. All dimensions in mm.

Ramin (Ray) Mashayekhi
M.Sc., M.Eng., EIT
Thermal-Fluid Systems | Energy | HVAC | CFD



Gear & parallel key

A02 + A03 | Bore, hub, tooth profile and keyed connection

SPUR GEAR

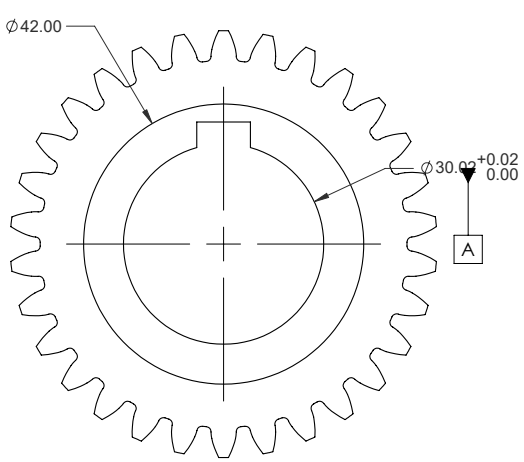

VIEW 1 - 1.5:1

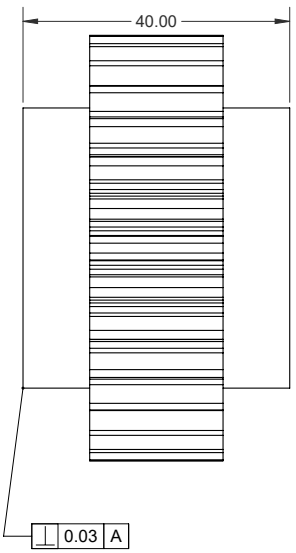

VIEW 2 - 1.5:1

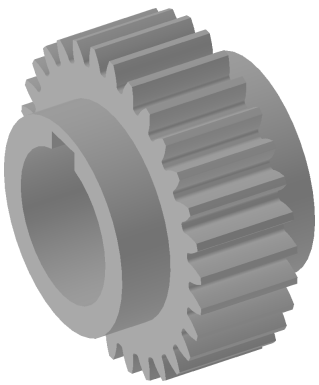

Module 2 | 30 teeth | Ø60 pitch | Ø64 tip | 40 mm hub

ROUNDED PARALLEL KEY

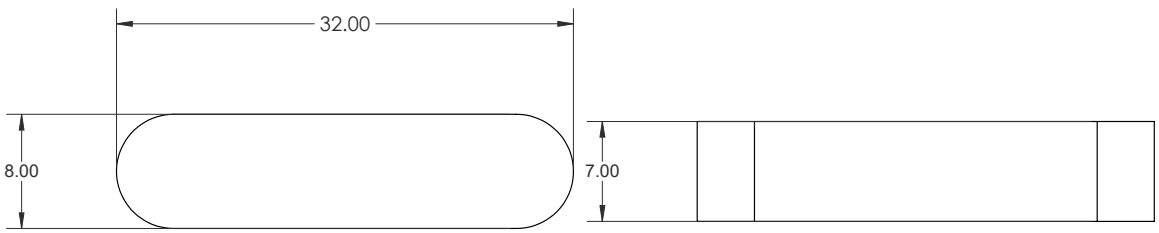

Key: 8 x 7 x 32 mm | Bore: Ø30.02 mm | Hub keyway: 8.04 mm

Native dimensioned views; selected dimensions shown. Full feature notes are in the A3 sheets.

Ramin (Ray) Mashayekhi
M.Sc., M.Eng., EIT
Thermal-Fluid Systems | Energy | HVAC | CFD



Bearing support

A05 | Plan, pocket-face and side views define the mounting geometry

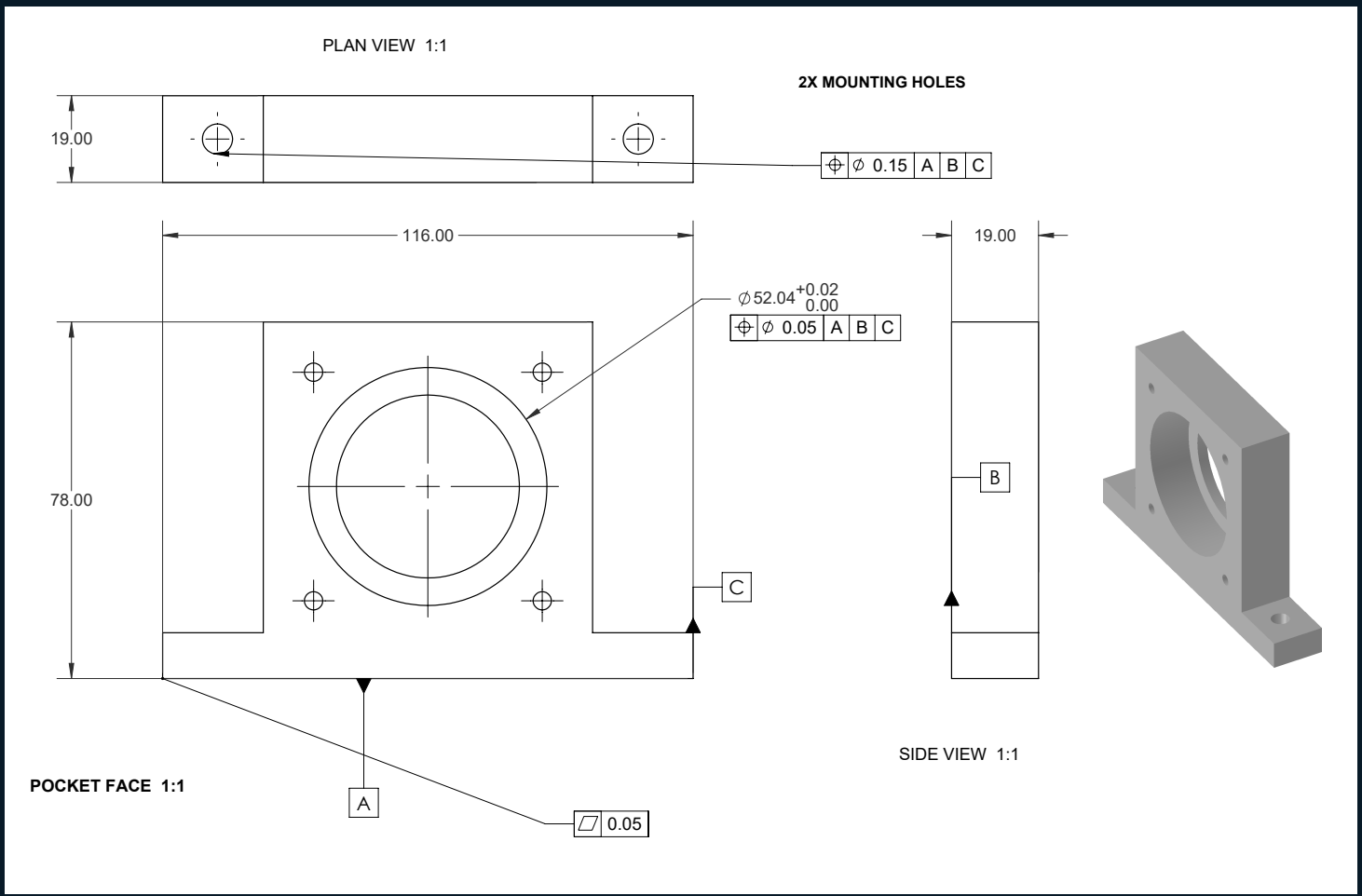

FEATURE DEFINITION

116 mm foot width / 78 mm overall height / 19 mm thickness

Ø52.04 bearing pocket, 15.20 mm deep; Ø40 shoulder opening

2 x Ø6.60 mounting holes; cover fixing pattern 50 x 50 mm

Center marks, aligned projections and toleranced feature sizes.

SolidWorks drawing extract - not to scale. Datum details follow on page 10.

Ramin (Ray) Mashayekhi
M.Sc., M.Eng., EIT
Thermal-Fluid Systems | Energy | HVAC | CFD



Cover & baseplate

A06 + A11 | Overall sizes, thicknesses and repeated mounting features

BEARING COVER

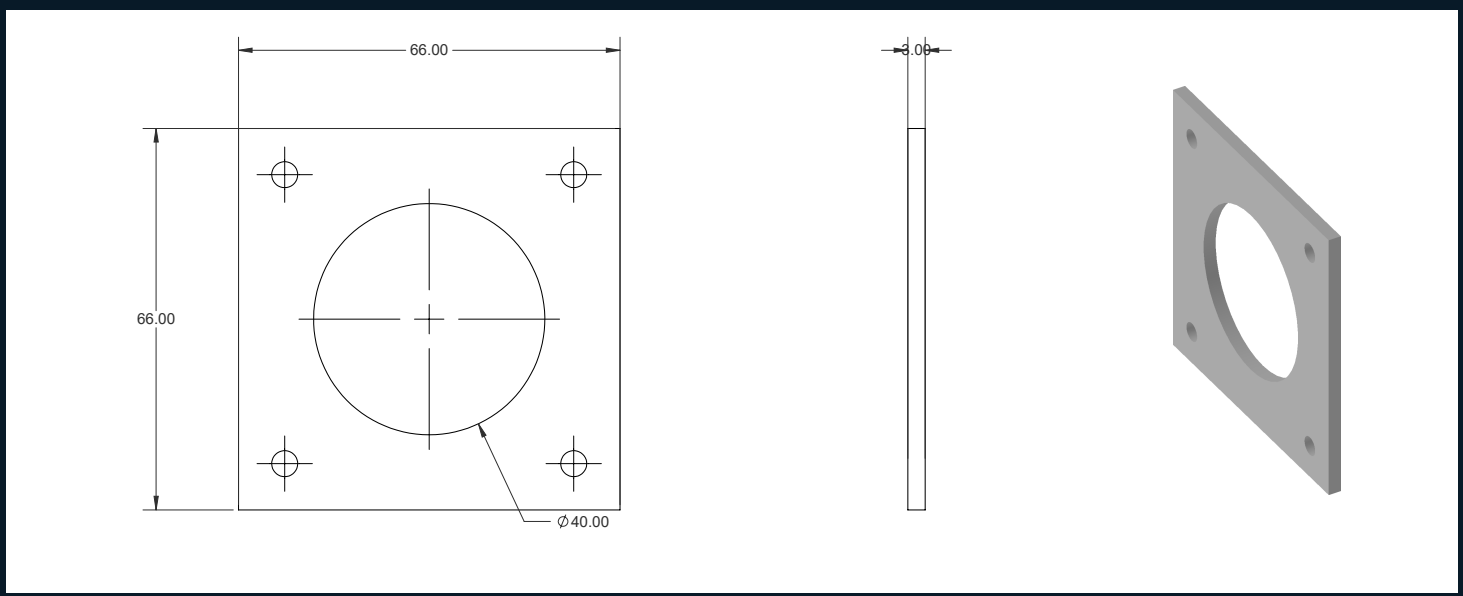

66 x 66 x 3 mm | Ø40 opening | 4 x Ø4.50 holes on 50 x 50

ASSEMBLY BASEPLATE

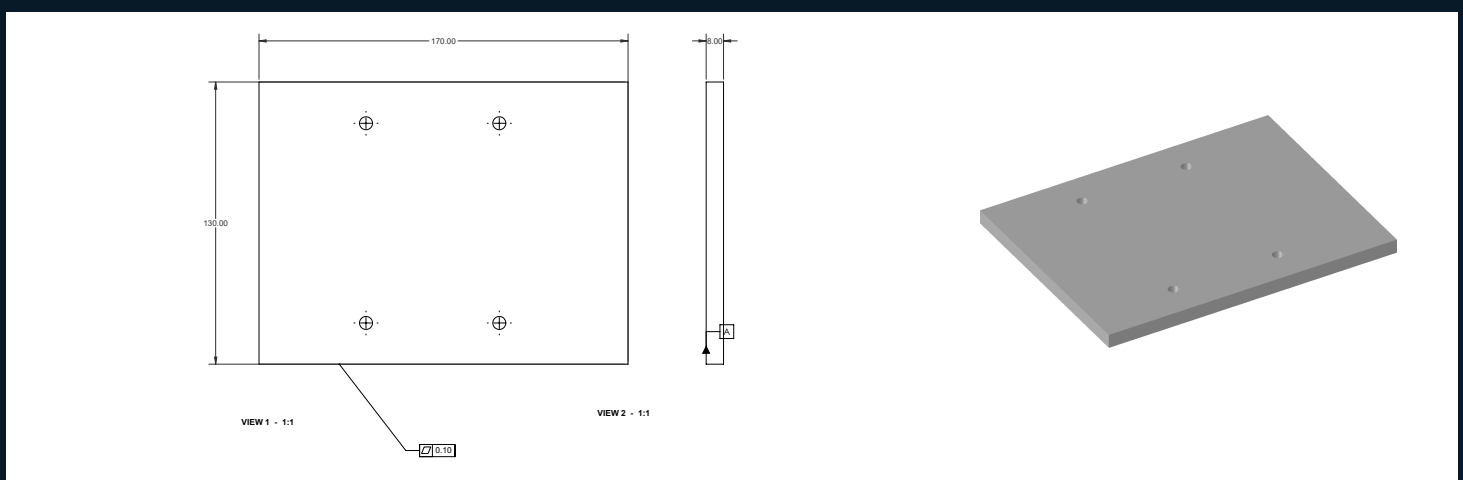

170 x 130 x 8 mm | Four M6 x 1 mounting-hole locations

Threads are nominal CAD envelopes; complete dimensions and notes accompany the A3 sheets.

Ramin (Ray) Mashayekhi

M.Sc., M.Eng., EIT

Thermal-Fluid Systems | Energy | HVAC | CFD



Spacing & retention

A07-A10 | Common diameters, axial lengths and split-clamp geometry

BEARING SPACERS + REMOVABLE SHOULDER

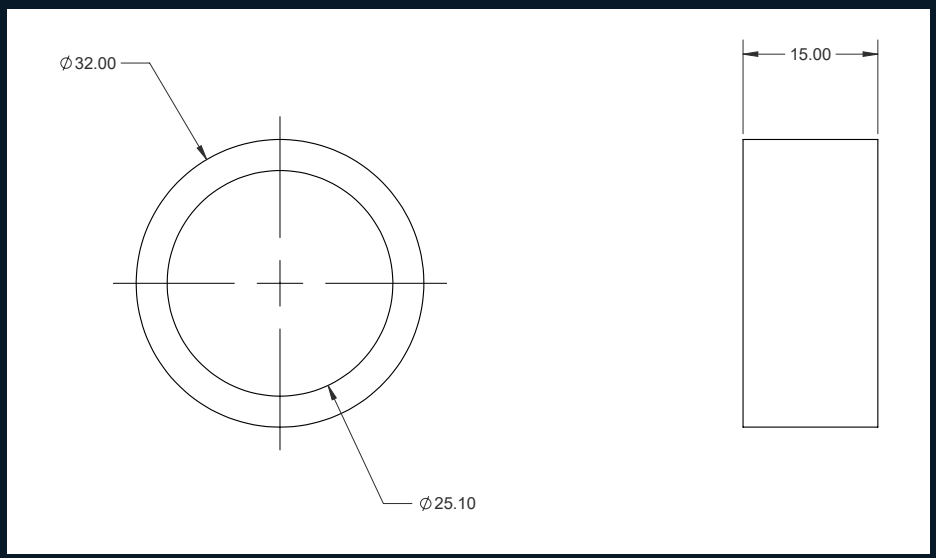

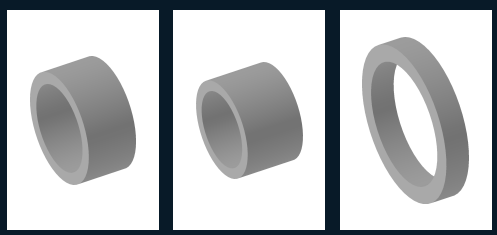

Ø32 outer / Ø25.10 bore

A07	Left spacer	15 mm
A08	Right spacer	20 mm
A09	Shoulder	5 mm

SPLIT CLAMP COLLAR

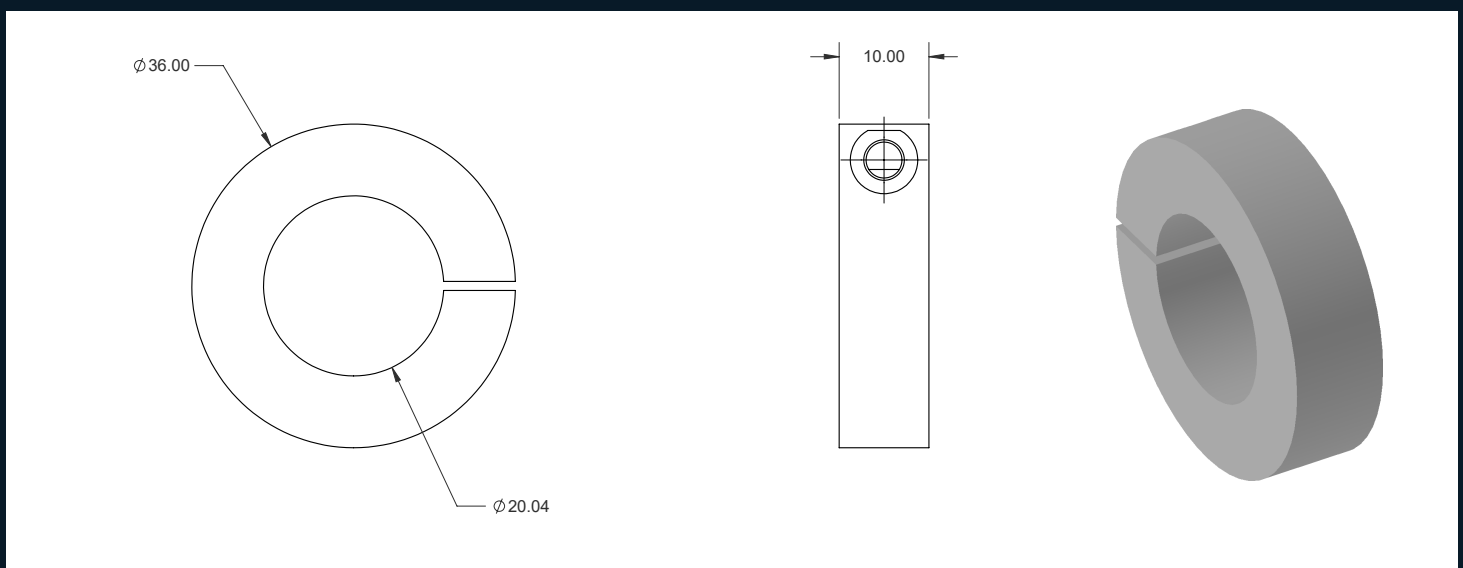

Ø36 outer / Ø20.04 bore / 10 mm length / 1 mm split / M4 clamp

Dimensioned native drawing views. Spacer lengths are individually documented in the A3 pack.

Ramin (Ray) Mashayekhi

M.Sc., M.Eng., EIT

Thermal-Fluid Systems | Energy | HVAC | CFD



Shaft: axis & face control

A01B | Native datum tag and feature-control frames on the drawing

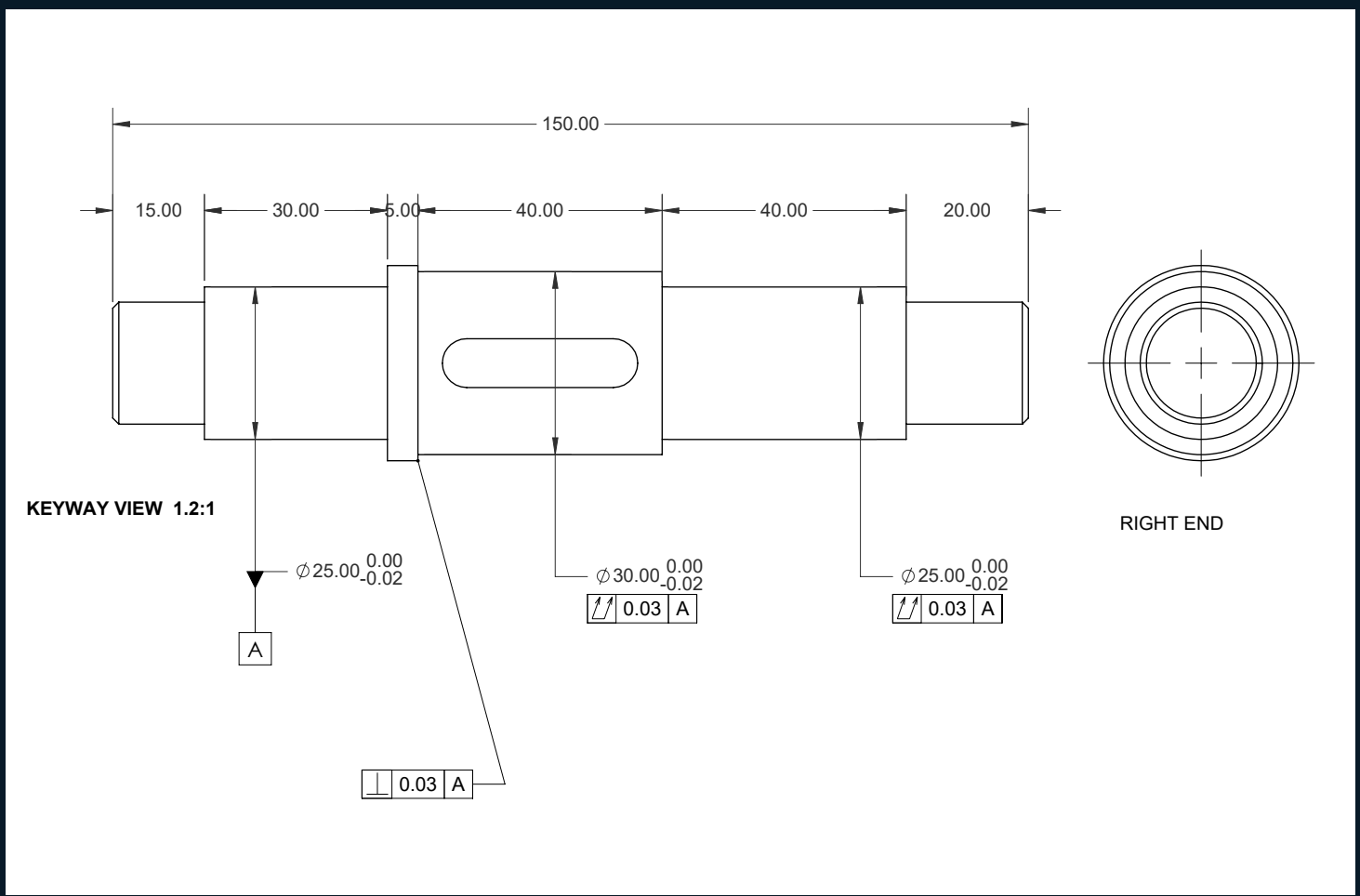

DATUM A Left Ø25 journal establishes the reference axis.

TOTAL RUNOUT 0.03 to A on the gear seat and right journal.

PERPENDICULARITY 0.03 to A on the gear-abutment face at X = 50.

Ø25 / Ø30 size limits: +0.00 / -0.02 mm

Proposed portfolio tolerances. Actual SolidWorks drawing extract; not to scale.

Ramin (Ray) Mashayekhi
M.Sc., M.Eng., EIT
Thermal-Fluid Systems | Energy | HVAC | CFD



Gear: bore datum

A02 | Face orientation related to the functional bore axis

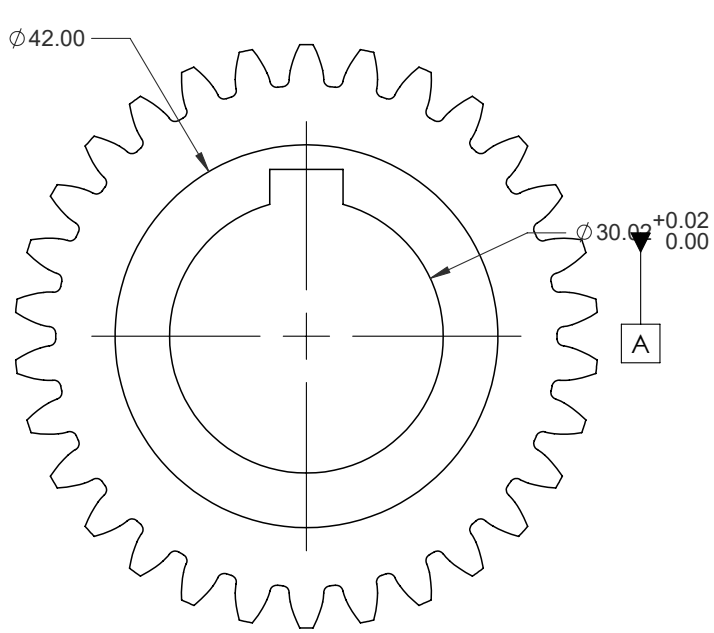

VIEW 1 - 1.5:1

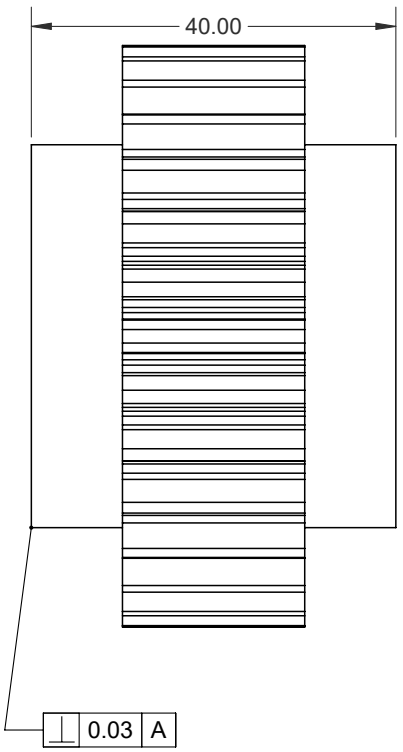

VIEW 2 - 1.5:1

DATUM A Ø30.02 bore axis.

PERPENDICULARITY 0.03 to A on the hub end face.

Bore limits: 30.02-30.04 mm | Keyway width: 8.04-8.07 mm

The bore and face controls do not specify gear-tooth accuracy.

Proposed portfolio tolerances. Actual SolidWorks drawing extract; not to scale.

Ramin (Ray) Mashayekhi
M.Sc., M.Eng., EIT
Thermal-Fluid Systems | Energy | HVAC | CFD



Support: datum reference frame

A05 | Position, flatness and boxed basic locations

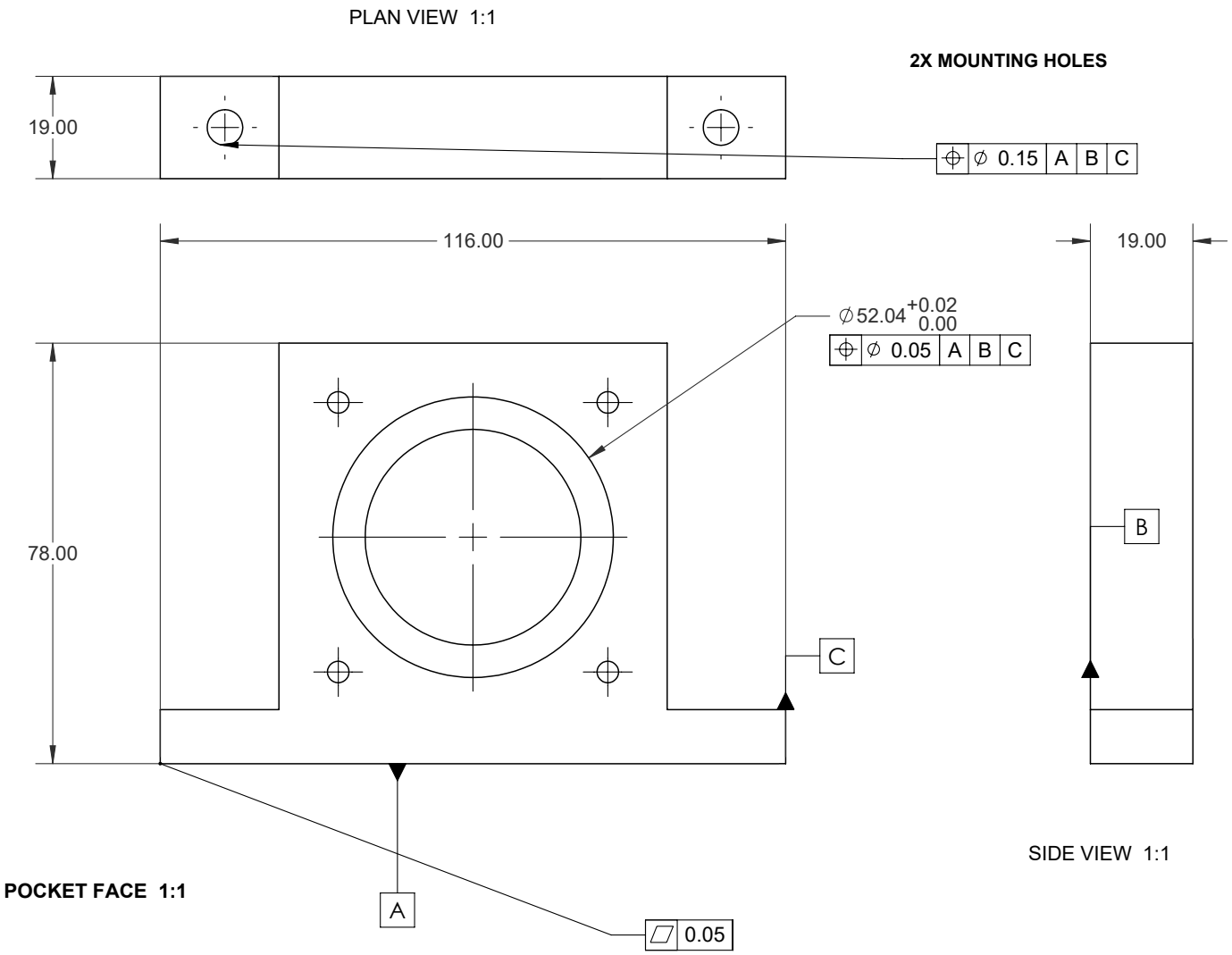

BASIC	42	58		Boxed values locate the pocket axis from A and C respectively; full datum frame A | B | C.
MOUNT HOLES BASIC:	9.50	12	104	X from B; the two Y locations from C.

A: mounting face | B: pocket-entry face | C: foot side

Ramin (Ray) Mashayekhi
M.Sc., M.Eng., EIT
Thermal-Fluid Systems | Energy | HVAC | CFD



Baseplate: surface control

A11 | Flatness of the mounting surface and overall plate dimensions

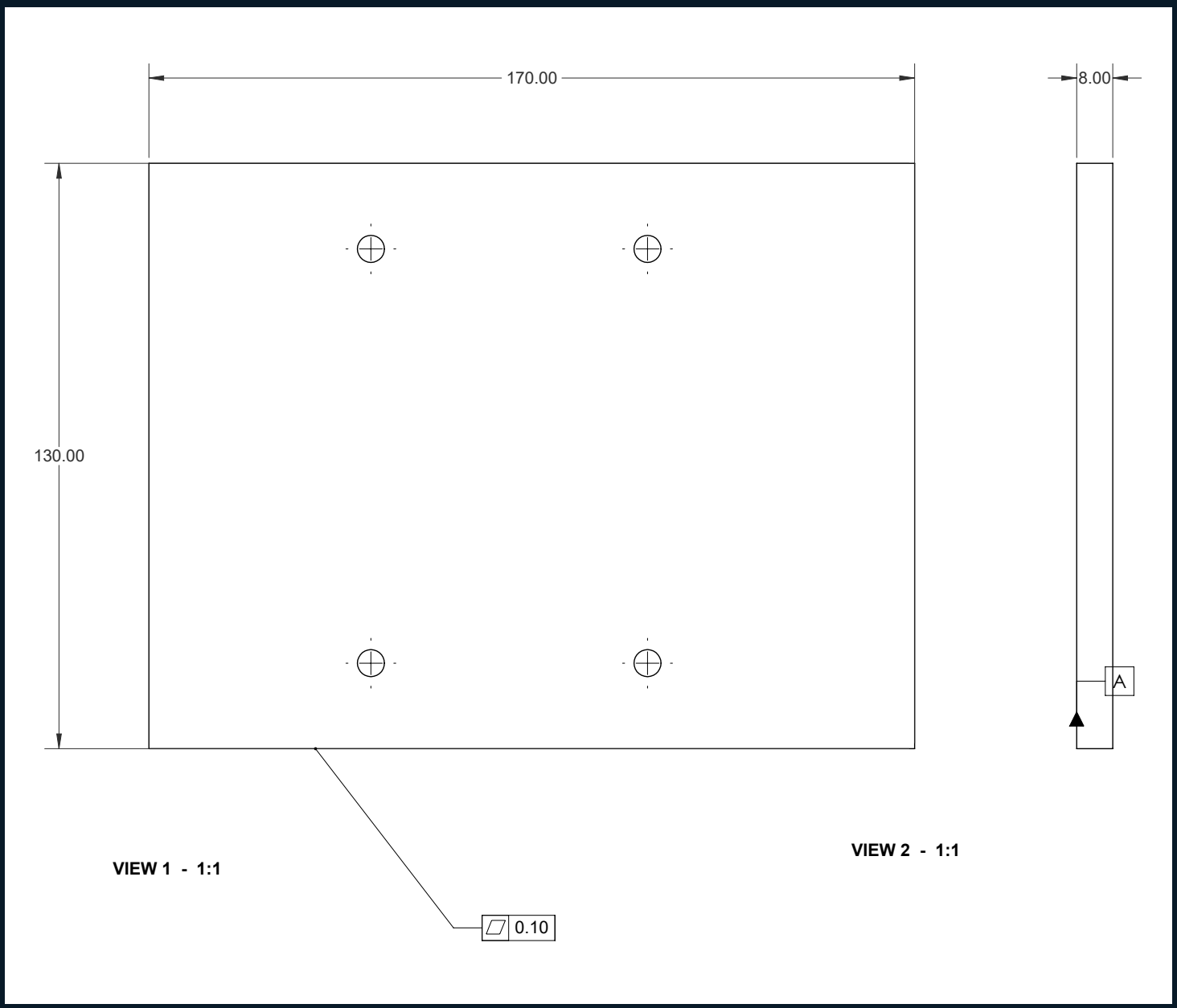

FLATNESS 0.10 Controls the top mounting surface independently.

Portfolio draft / proposed tolerances. Full A3 technical sheets are included in the package.

Ramin (Ray) Mashayekhi
M.Sc., M.Eng., EIT
Thermal-Fluid Systems | Energy | HVAC | CFD



PROJECT A / PORTFOLIO STUDY / mm / DRAWING EXTRACTS NOT TO SCALE