PROJECT A / MECHANICAL CAD & GD&T

Project_A_Assembly | GENERAL ARRANGEMENT

PORTFOLIO DRAFT - PROPOSED TOLERANCES

Units: mm | See individual view scales

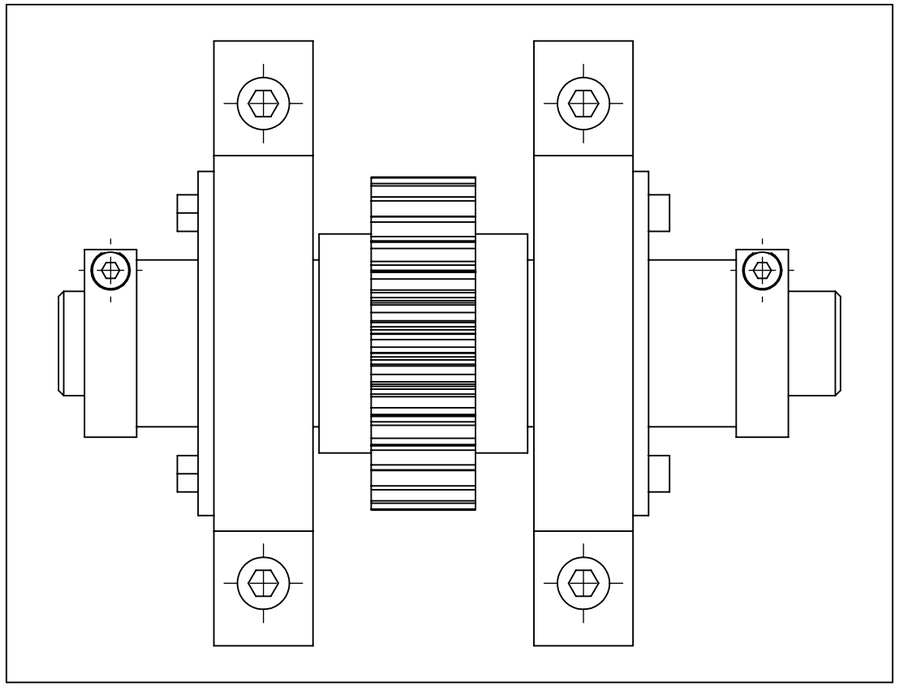

PLAN VIEW 0.85:1

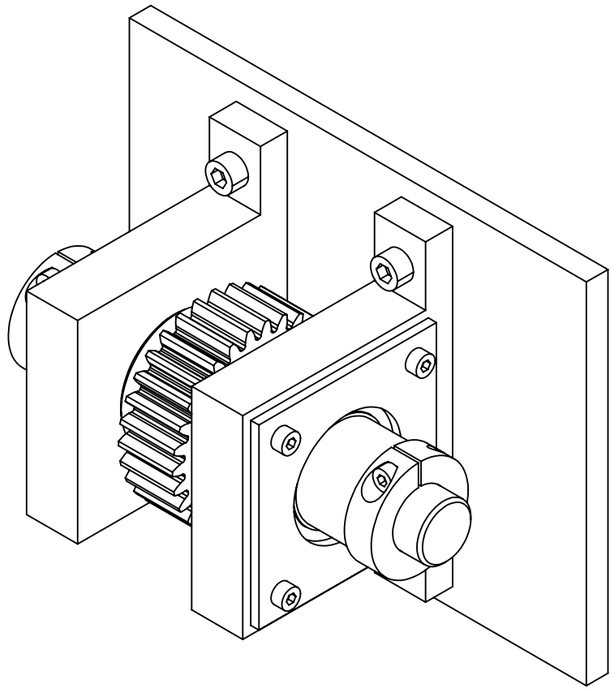

ISOMETRIC 0.62:1

DIMENSIONS & FEATURE NOTES

ASSEMBLY ENVELOPE
Baseplate170 x130 x8
Shaft overall150
Shaft center42 above plate

PARTS LIST / QUANTITY
A01B Assembly shaft /1
A02 Spur gear /1
A03 Parallel key /1
A04 Bearing6205 size /2
A05 Bearing support /2
A06 Bearing cover /2
A07 Left spacer /1
A08 Right spacer /1
A09 Shoulder spacer /1
A10 Clamp collar /2
A11 Baseplate /1
A12 M4x10 screws /8
A13 M6x16 screws /4
A14 M4x12 screws /2

29 component instances
55 solid bodies

Use A01B and A09 together.
Arrangement is positioned;
no SolidWorks mates are
included in the source part.

GENERAL ARRANGEMENT ONLY. Bearings and fasteners are simplified reference geometry; see GD&T report.

DRAWING: Project_A_Assembly REV: P1 SHEET: 1 OF 11

ASME Y14.5-2018 notation | Proposed values for design review | Do not scale drawing

GENERAL: linear +/-0.10; angles +/-0.5 deg unless stated. Material / finish: TBD.

PROJECT A / MECHANICAL CAD & GD&T

A01B_Assembly_Shaft | ASSEMBLY SHAFT

PORTFOLIO DRAFT - PROPOSED TOLERANCES

Units: mm | See individual view scales

TOP VIEW 1.2:1

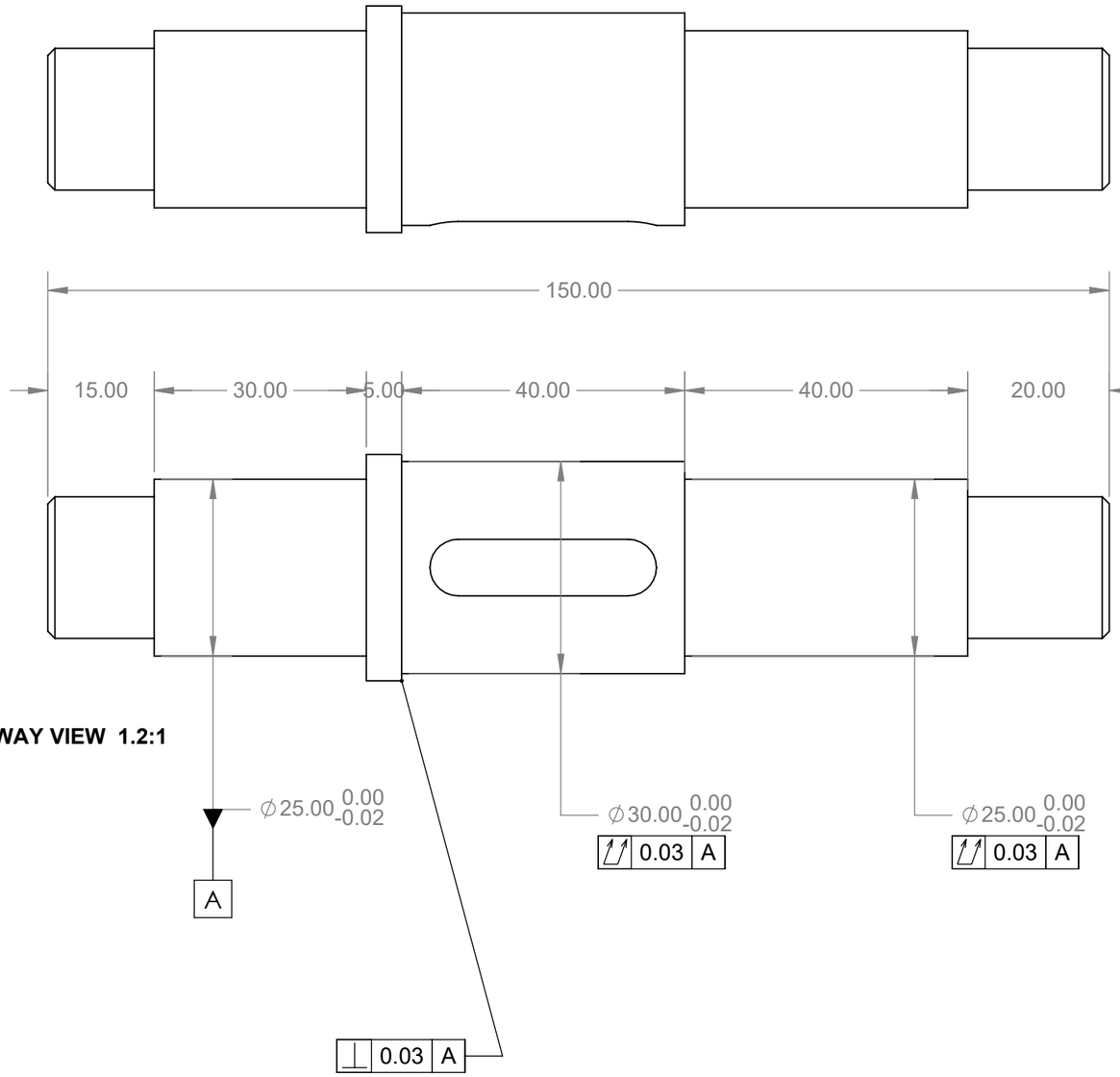

KEYWAY VIEW 1.2:1

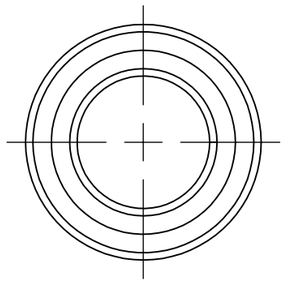

RIGHT END

DIMENSIONS & FEATURE NOTES

AXIAL STATIONS / DIAMETERS
0-15: DIA20 +0/-0.05
15-45: DIA25 +0/-0.02 (A)
45-50: DIA32 +/-0.10
50-90: DIA30 +0/-0.02
90-130: DIA25 +0/-0.02
130-150: DIA20 +0/-0.05

KEYWAY
Width 8 +0.03/0
Overall length 32 +/-0.10
Radial depth 4 +/-0.05
Left end at station 54 +/-0.10
Rounded ends R4; centered on the 40 mm gear seat.

2X END CHAMFER 1 x45 deg
A = left DIA25 journal axis.
Perpendicularity applies to gear-abutment face at X=50.

REVISION NOTE
Station90-95 is DIA25.
Fit removable spacer A09; do not use original A01.

Total runout applies to the gear seat and right DIA25 journal. Datum A is attached to the left journal diameter dimension.

DRAWING: A01B_Assembly_Shaft REV: P1 SHEET: 2 OF 11

ASME Y14.5-2018 notation | Proposed values for design review | Do not scale drawing

GENERAL: linear +/-0.10; angles +/-0.5 deg unless stated. Material / finish: TBD.

PROJECT A / MECHANICAL CAD & GD&T

A02_Spur_Gear | SPUR GEAR

PORTFOLIO DRAFT - PROPOSED TOLERANCES

Units: mm | See individual view scales

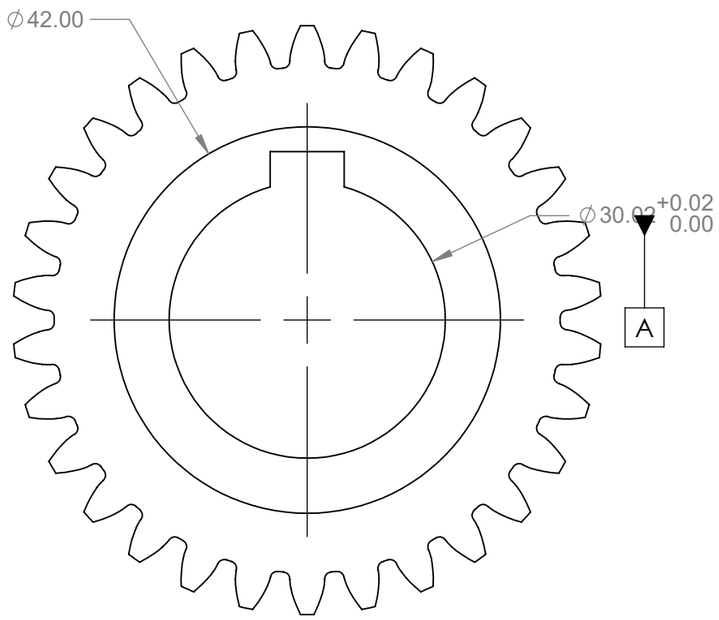

VIEW 1 - 1.5:1

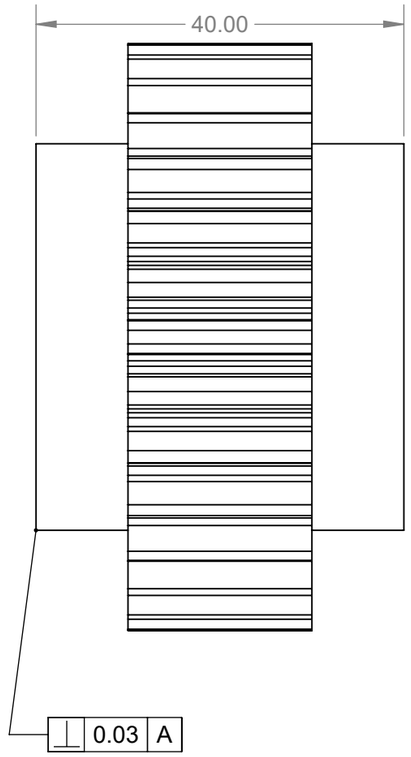

VIEW 2 - 1.5:1

DIMENSIONS & FEATURE NOTES

GEAR DATA
Module2; teeth30
Pressure angle20 deg
Pitch diameter60 (REF)
Tip diameter64 (REF)
Toothed face width20
Hub diameter42; length40
Rim centered on hub

BORE / KEYWAY
Bore30.02 +0.02/0
Datum A = bore axis
Hub keyway8.04 +0.03/0
Keyway roof18.30 +/-0.05
from axis, through full hub

Face perpendicularity0.03
applies to datum-side hub
end face, relative to bore A.

Involute generated by
FreeCAD's built-in tool.
Tooth quality, backlash and
gear accuracy class TBD.
No tooth-flank GD&T is
implied by these callouts.

DRAWING: A02_Spur_Gear REV: P1 SHEET: 3 OF 11

ASME Y14.5-2018 notation | Proposed values for design review | Do not scale drawing

GENERAL: linear +/-0.10; angles +/-0.5 deg unless stated. Material / finish: TBD.

PROJECT A / MECHANICAL CAD & GD&T

A03_Parallel_Key | ROUNDED PARALLEL KEY

PORTFOLIO DRAFT - PROPOSED TOLERANCES

Units: mm | See individual view scales

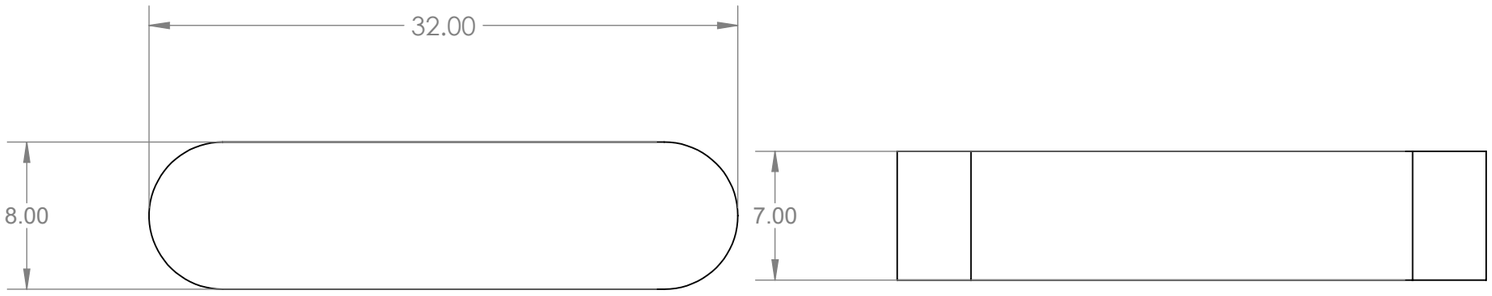

DIMENSIONS & FEATURE NOTES

KEY DIMENSIONS
Overall length32 +/-0.10
Width8 -0.01/-0.03
Height7 +/-0.03
Both ends R4 nominal
Straight tangent length24

Installed floor at Z=11
Nominal top at Z=18
Hub roof is at Z=18.3
Nominal top clearance0.3

Break sharp edges0.1 MAX.
Material and hardness TBD.
Dimensioned for this custom portfolio shaft and gear.
No standard key tolerance class is claimed.

32 = overall length; tangent length24

VIEW 1 - 3:1

VIEW 2 - 3:1

DRAWING: A03_Parallel_Key REV: P1 SHEET: 4 OF 11

ASME Y14.5-2018 notation | Proposed values for design review | Do not scale drawing

GENERAL: linear +/-0.10; angles +/-0.5 deg unless stated. Material / finish: TBD.

PROJECT A / MECHANICAL CAD & GD&T

A05_Bearing_Support | BEARING SUPPORT

PORTFOLIO DRAFT - PROPOSED TOLERANCES

Units: mm | See individual view scales

PLAN VIEW 1:1

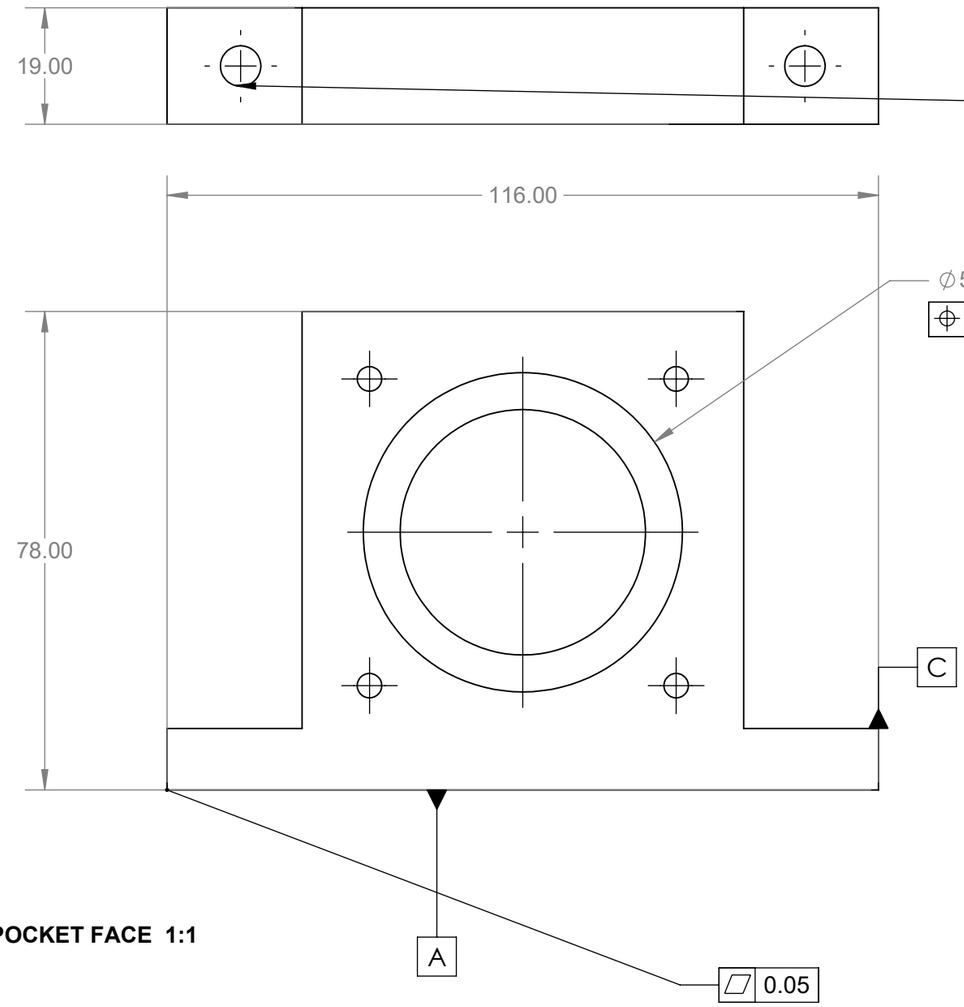

POCKET FACE 1:1

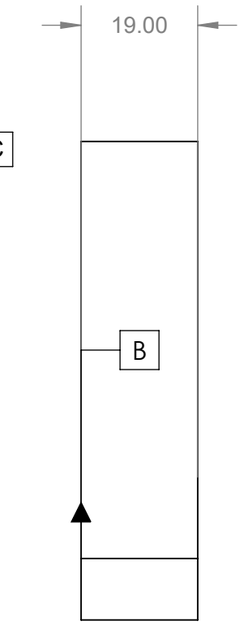

SIDE VIEW 1:1

DIMENSIONS & FEATURE NOTES

LOCATING DATUMS
A: bottom mounting face
B: pocket-entry front face
C: side of foot at Y=-58

BASIC BORE LOCATION
42 above A; 58 from C.
Axis is perpendicular to B.
Pocket DIA52.04 +0.02/0
Pocket depth 15.20 +/-0.05
Shoulder opening DIA40

MOUNTING HOLES
2X DIA6.60 +0.10/0 THRU
Basic X from B: 9.50
Basic Y from C: 12, 104

COVER HOLES
4X M4 x0.7, depth8
Centers: Y=+/-25, Z=+/-25
Nominal 50 x50 pattern
CAD uses DIA4 envelopes.

ENVELOPE
Thickness19; height78
Foot116 wide x10 high
Upright72 wide; top Z=36

Bore position controls its
axis location and orientation.

BASIC 42 58 Boxed values locate the pocket axis from A and C respectively; full datum frame A | B | C.

MOUNT HOLES BASIC: 9.50 12 104 X from B; the two Y locations from C.

DRAWING: A05_Bearing_Support REV: P1 SHEET: 5 OF 11

ASME Y14.5-2018 notation | Proposed values for design review | Do not scale drawing

GENERAL: linear +/-0.10; angles +/-0.5 deg unless stated. Material / finish: TBD.

PROJECT A / MECHANICAL CAD & GD&T

A06_Bearing_Cover | BEARING RETAINING COVER

PORTFOLIO DRAFT - PROPOSED TOLERANCES

Units: mm | See individual view scales

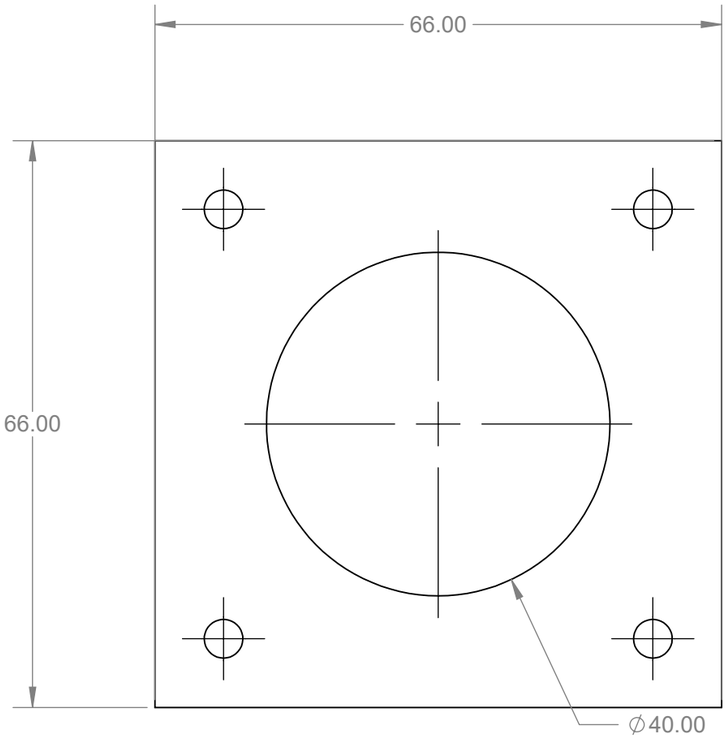

VIEW 1 - 1.4:1

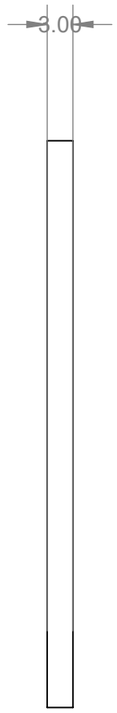

VIEW 2 - 1.4:1

DIMENSIONS & FEATURE NOTES

COVER DIMENSIONS
66 square x3 thick
Center opening DIA40
4X DIA4.50 +0.10/0 THRU
Hole centers on50 x50
square, centered on cover
Edges to hole centers8 REF

Opening clears rotating
spacers and shaft collars.
Nominal bearing axial
clearance0.2 in assembly.

Deburr; break edges0.2 MAX.
Material / finish TBD.

DRAWING: A06_Bearing_Cover REV: P1 SHEET: 6 OF 11

ASME Y14.5-2018 notation | Proposed values for design review | Do not scale drawing

GENERAL: linear +/-0.10; angles +/-0.5 deg unless stated. Material / finish: TBD.

PROJECT A / MECHANICAL CAD & GD&T

A07_Left_Spacer | LEFT BEARING SPACER

PORTFOLIO DRAFT - PROPOSED TOLERANCES

Units: mm | See individual view scales

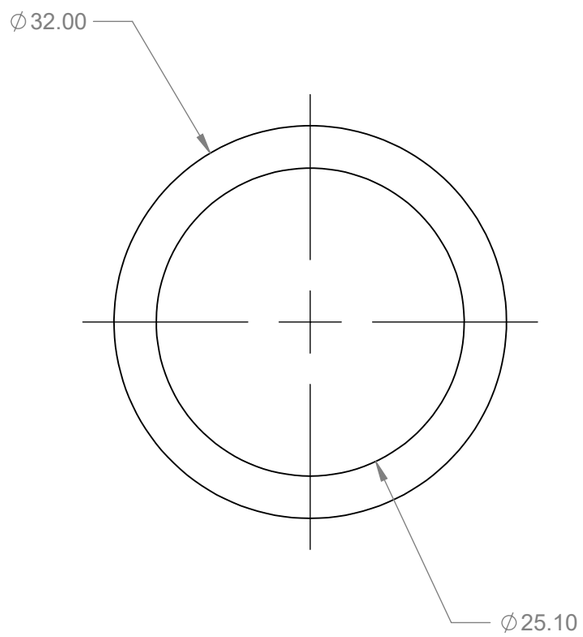

VIEW 1 - 2:1

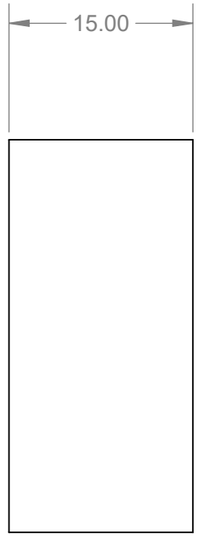

VIEW 2 - 2:1

DIMENSIONS & FEATURE NOTES

SPACER DIMENSIONS
Outside DIA32 +/-0.10
Bore DIA25.10 +0.05/0
Length15 +/-0.05

Installed stations15-30
Bears against bearing
inner ring and end collar.

Deburr; break edges0.2 MAX.
Material / finish TBD.

DRAWING: A07_Left_Spacer REV: P1 SHEET: 7 OF 11

ASME Y14.5-2018 notation | Proposed values for design review | Do not scale drawing

GENERAL: linear +/-0.10; angles +/-0.5 deg unless stated. Material / finish: TBD.

PROJECT A / MECHANICAL CAD & GD&T

A08_Right_Spacer | RIGHT BEARING SPACER

PORTFOLIO DRAFT - PROPOSED TOLERANCES

Units: mm | See individual view scales

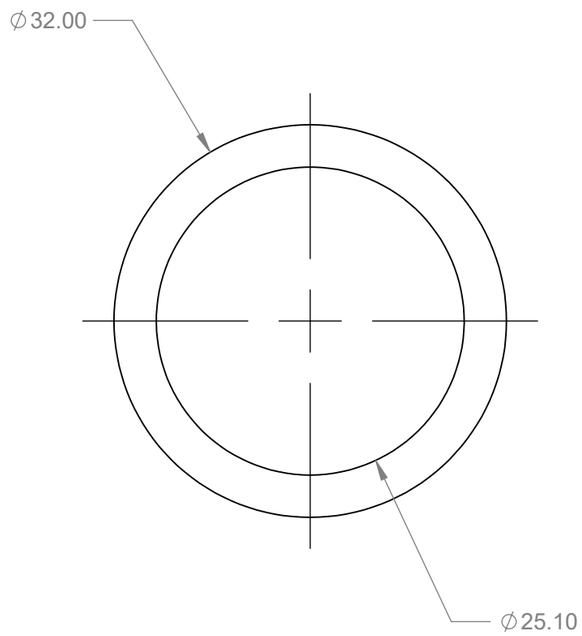

VIEW 1 - 2:1

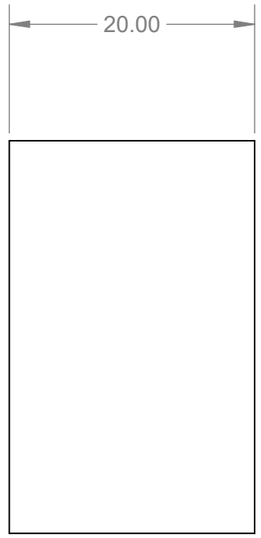

VIEW 2 - 2:1

DIMENSIONS & FEATURE NOTES

SPACER DIMENSIONS
Outside DIA32 +/-0.10
Bore DIA25.10 +0.05/0
Length20 +/-0.05

Installed stations110-130
Bears against bearing
inner ring and end collar.

Deburr; break edges0.2 MAX.
Material / finish TBD.

DRAWING: A08_Right_Spacer REV: P1 SHEET: 8 OF 11

ASME Y14.5-2018 notation | Proposed values for design review | Do not scale drawing

GENERAL: linear +/-0.10; angles +/-0.5 deg unless stated. Material / finish: TBD.

PROJECT A / MECHANICAL CAD & GD&T

A09_Removable_Shoulder | REMOVABLE GEAR SHOULDER

PORTFOLIO DRAFT - PROPOSED TOLERANCES

Units: mm | See individual view scales

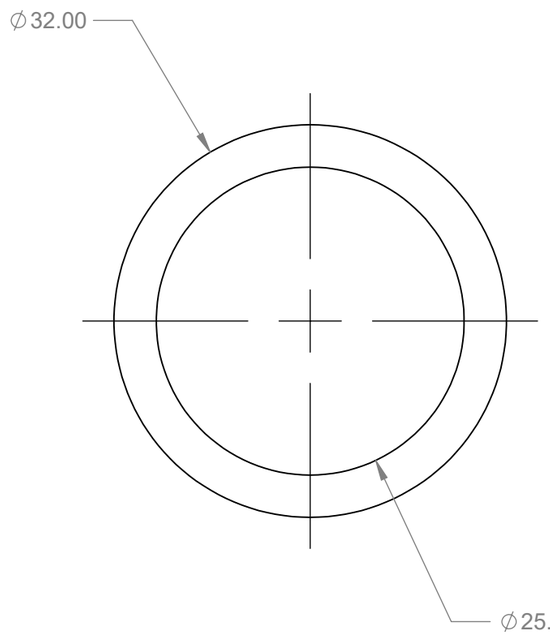

VIEW 1 - 2:1

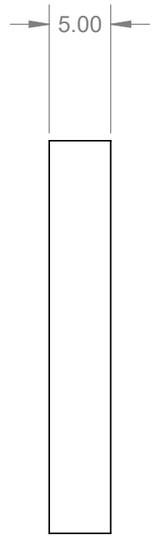

VIEW 2 - 2:1

DIMENSIONS & FEATURE NOTES

SPACER DIMENSIONS
Outside DIA32 +/-0.10
Bore DIA25.10 +0.05/0
Length5 +/-0.05

Installed stations90-95
Use with A01B shaft.
Install after sliding gear
onto the shaft from right.

Deburr; break edges0.2 MAX.
Material / finish TBD.

DRAWING: A09_Removable_Shoulder REV: P1 SHEET: 9 OF 11

ASME Y14.5-2018 notation | Proposed values for design review | Do not scale drawing

GENERAL: linear +/-0.10; angles +/-0.5 deg unless stated. Material / finish: TBD.

PROJECT A / MECHANICAL CAD & GD&T

A10_Clamp_Collar | SPLIT CLAMP COLLAR

PORTFOLIO DRAFT - PROPOSED TOLERANCES

Units: mm | See individual view scales

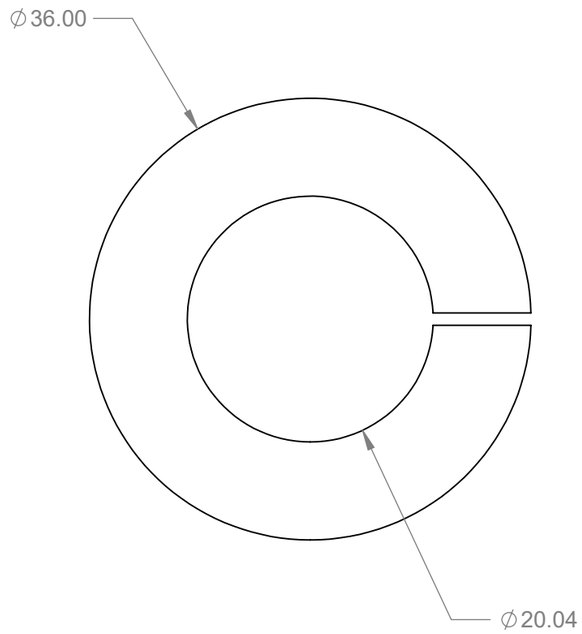

VIEW 1 - 2:1

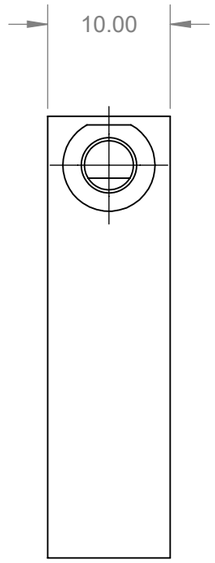

VIEW 2 - 2:1

DIMENSIONS & FEATURE NOTES

COLLAR DIMENSIONS
Outside DIA36 +/-0.10
Bore DIA20.04 +0.03/0
Width10 +/-0.05
Clamp slit1.00 +/-0.10
Slit lies on positive-Y side

CLAMP SCREW LOCATION
X=5; Y=14; axis along Z
Head seat Z=5
Counterbore DIA7.50
Upper clearance DIA4.50
Lower M4 x0.7 thread
Use M4x12 socket screw

Nominal thread envelopes are shown in CAD; thread form is not modeled.
Clamping torque TBD.

DRAWING: A10_Clamp_Collar REV: P1 SHEET: 10 OF 11

ASME Y14.5-2018 notation | Proposed values for design review | Do not scale drawing

GENERAL: linear +/-0.10; angles +/-0.5 deg unless stated. Material / finish: TBD.

PROJECT A / MECHANICAL CAD & GD&T

A11_Baseplate | ASSEMBLY BASEPLATE

PORTFOLIO DRAFT - PROPOSED TOLERANCES

Units: mm | See individual view scales

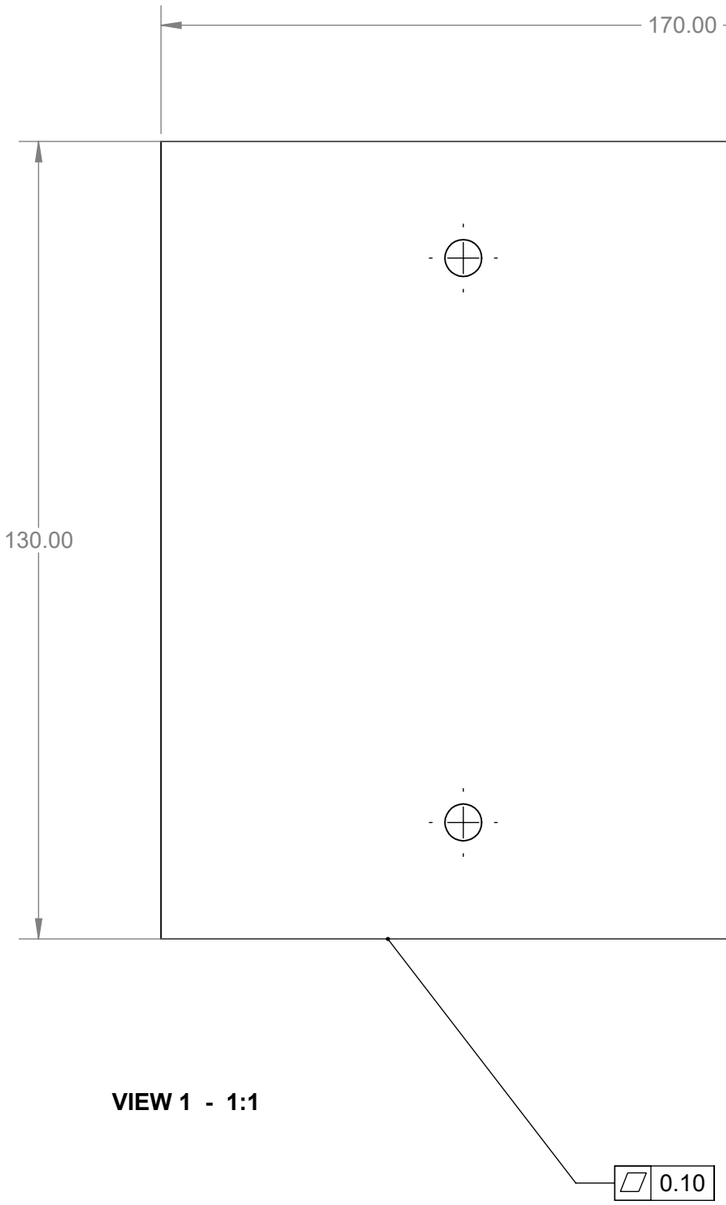

VIEW 1 - 1:1

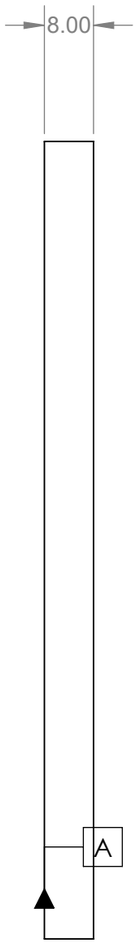

VIEW 2 - 1:1

DIMENSIONS & FEATURE NOTES

PLATE DIMENSIONS
Length170; width130
Thickness8
Datum A = top surface
Flatness0.10 over A

4X M6 x1 THRU
Coordinates from plate
lower-left corner:
X=49.30 and110.70
Y=19.00 and111.00
(4 combinations)

CAD uses nominal DIA6
thread envelopes, not
tap-drill geometry.

Deburr; break edges0.2 MAX.
Material / finish TBD.

DRAWING: A11_Baseplate REV: P1 SHEET: 11 OF 11

ASME Y14.5-2018 notation | Proposed values for design review | Do not scale drawing

GENERAL: linear +/-0.10; angles +/-0.5 deg unless stated. Material / finish: TBD.