AUTOCAD 2D / GD&T

Mechanical Drawings

Three components. Dimensions, datums and manufacturing detail.

01 Flanged bearing housing

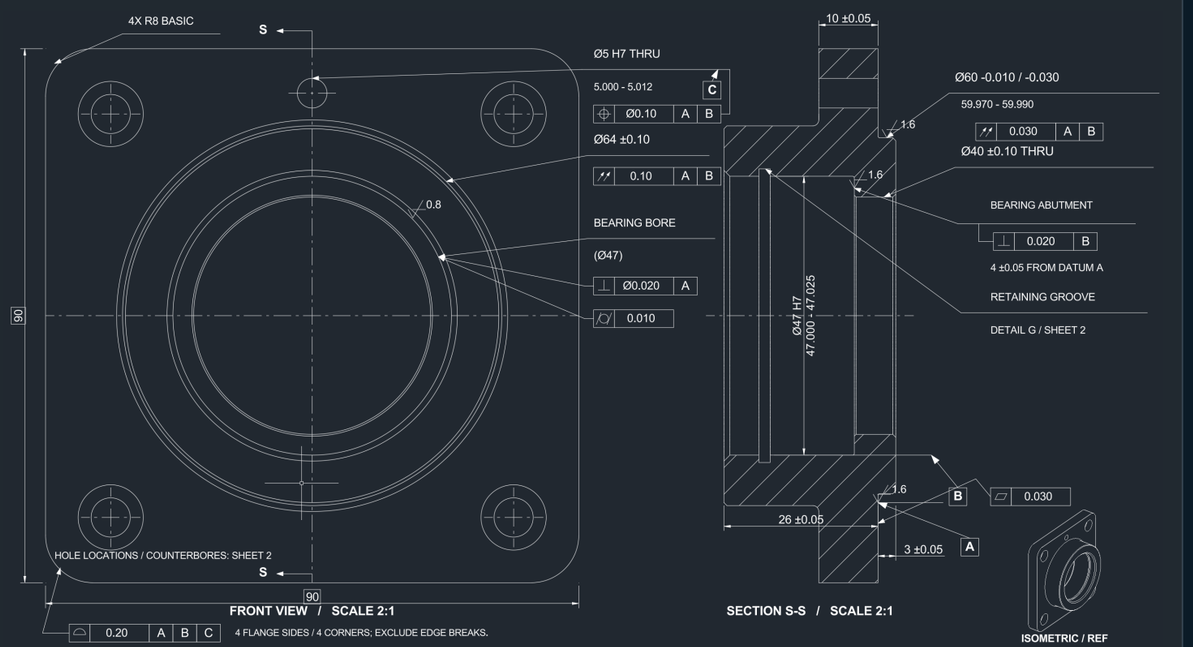

02 Sheet-metal bracket

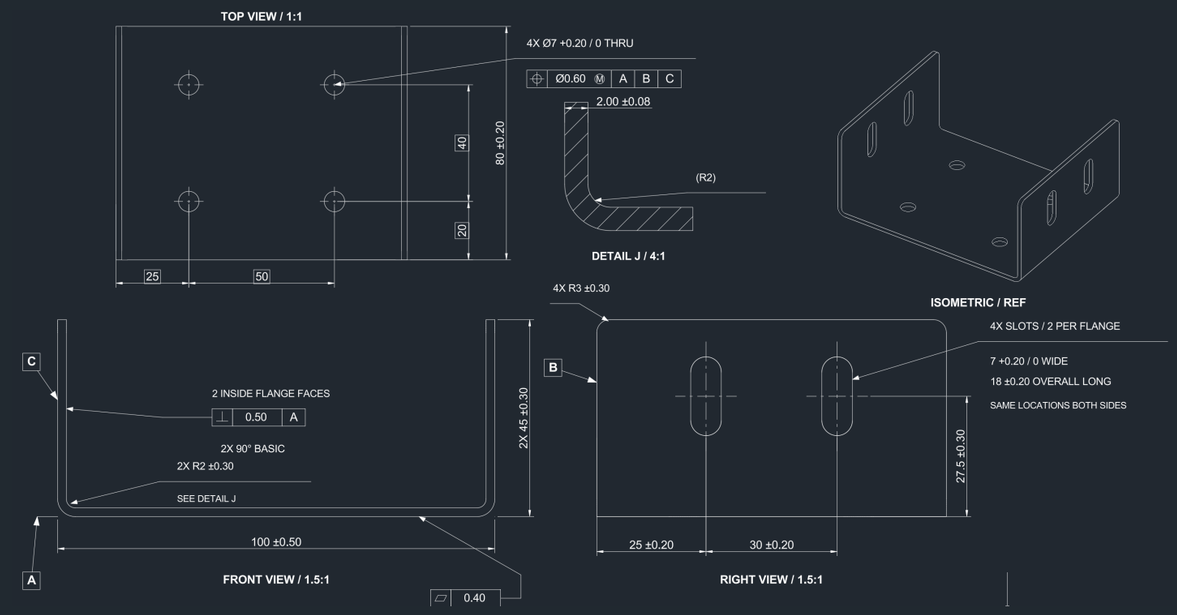

03 Stepped transmission shaft

Bearing journals
Fits & runout
Keyway & thread

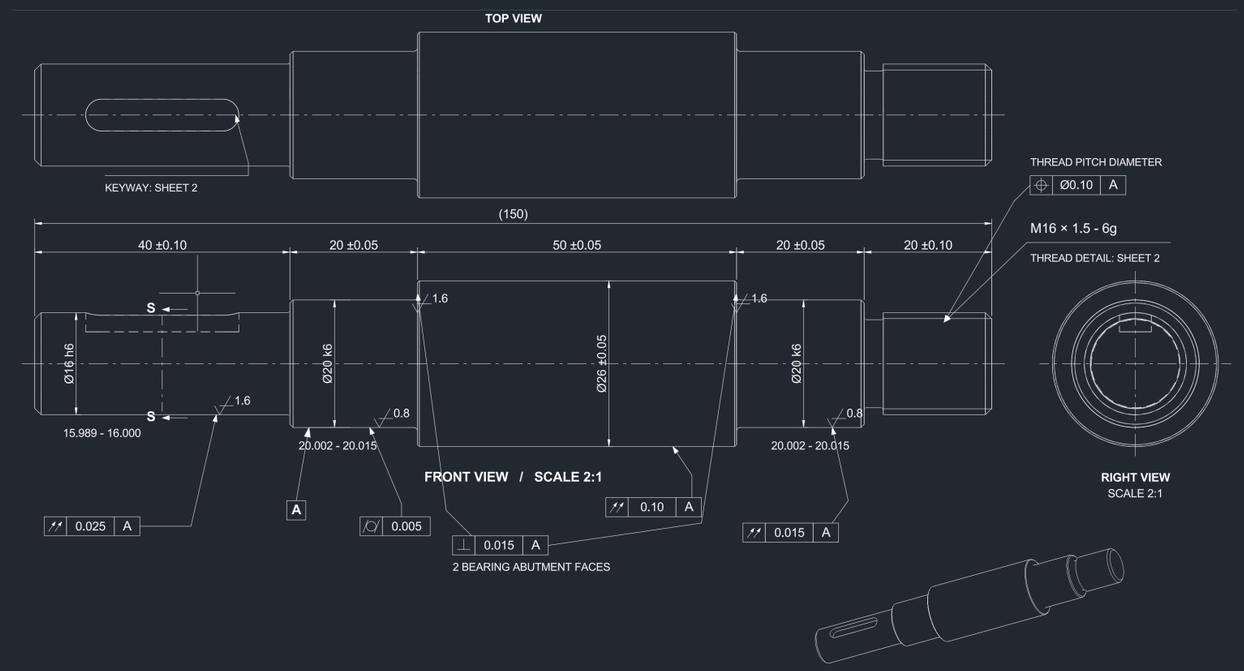

Ramin (Ray) Mashayekhi, M.Sc, M.Eng, EIT
Thermal-Fluid Systems | Energy | HVAC | CFD



REV	DATE	DESCRIPTION
A	2026-09-11	INITIAL PORTFOLIO ISSUE
		STATUS: DESIGN STUDY

BH02-001 / PART DEFINITION

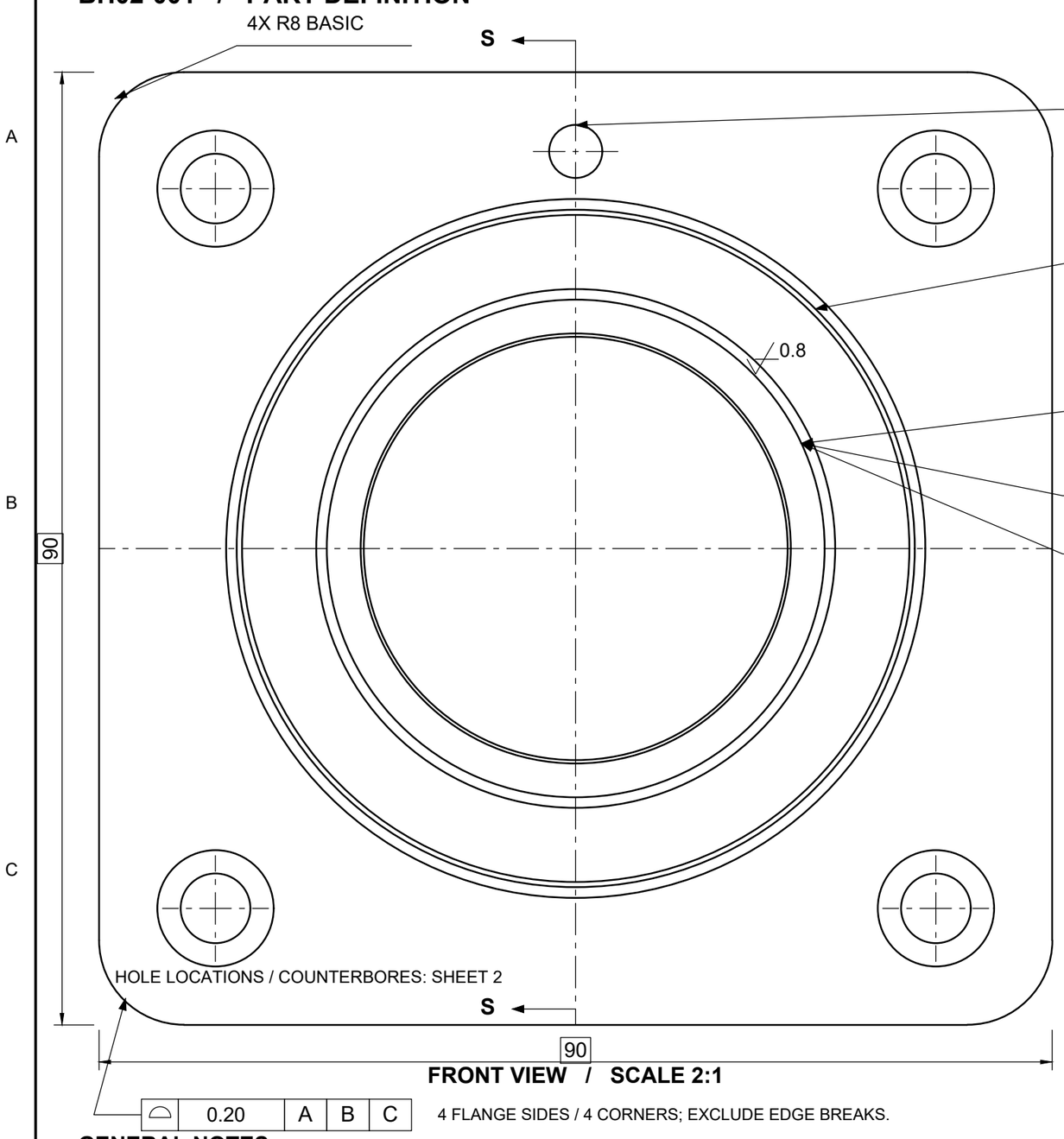

FRONT VIEW / SCALE 2:1

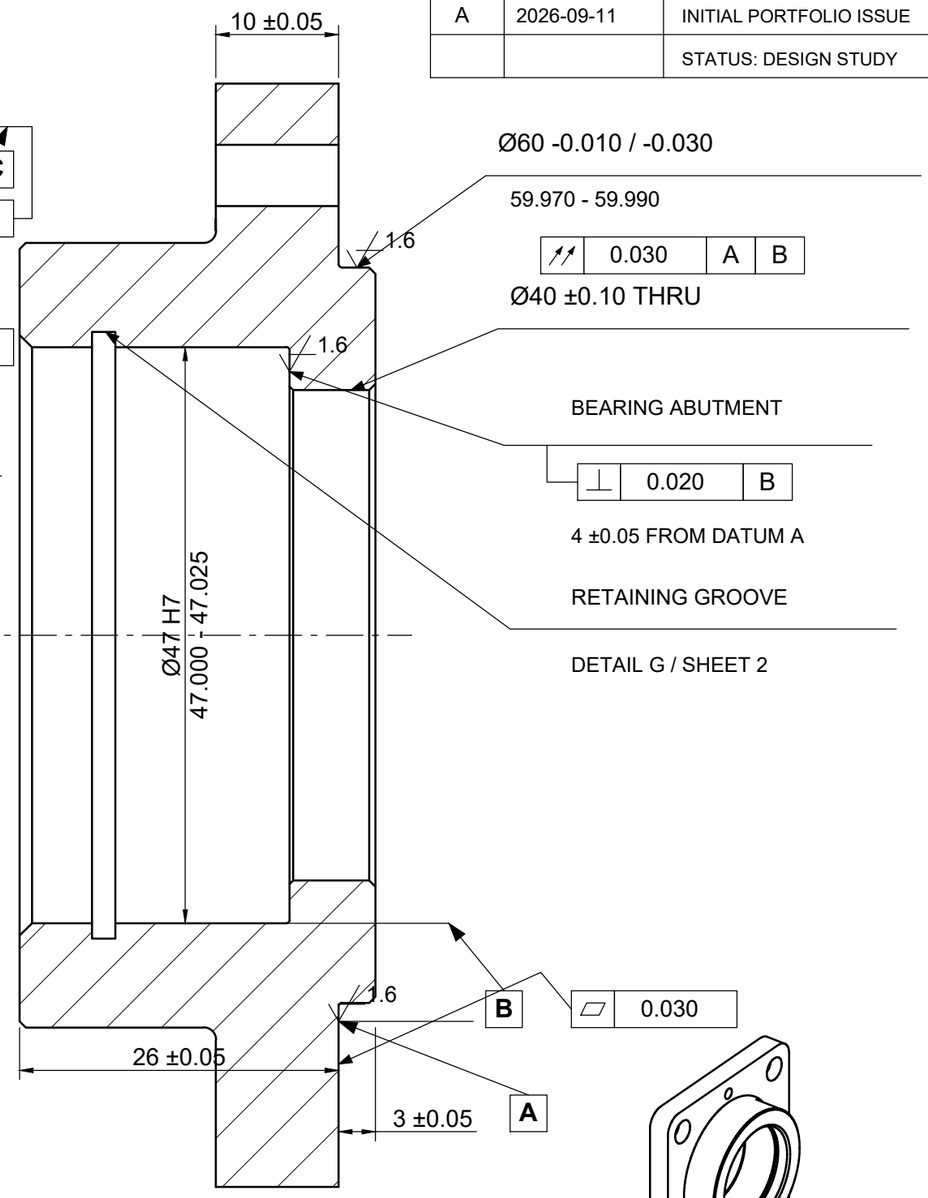

SECTION S-S / SCALE 2:1

ISOMETRIC / REF

0.20 A B C — 4 FLANGE SIDES / 4 CORNERS; EXCLUDE EDGE BREAKS.

GENERAL NOTES

1. DIMENSIONS IN mm. GD&T: ASME Y14.5-2018.
2. ISO 286 FITS. NUMERICAL LIMITS CONTROL MANUFACTURE.
3. UNLESS SPECIFIED: LINEAR ±0.10; ANGULAR ±0.5°.
4. Ra 3.2 µm MAX UNLESS MARKED. ISO 1302:2002 SYMBOLS.
5. REMOVE BURRS. UNDIMENSIONED EDGES: 0.2-0.4 × 45°.
6. NO COATING. CLEAN BORE AND GROOVE AFTER MACHINING.
7. READ BOTH SHEETS. DO NOT SCALE THE DRAWING.

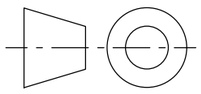

THIRD ANGLE

Ramin (Ray) Mashayekhi, M.Sc, M.Eng, EIT

FLANGED BEARING HOUSING

DRAWING No.	SHEET CONTENT
BH02-001	PART DEFINITION

MATERIAL: 6061-T6 ALUMINUM

UNITS	SCALE	SIZE	REV	SHEET
mm	**AS SHOWN**	**A3**	**A**	**1 / 2**

Ramin (Ray) Mashayekhi, M.Sc, M.Eng, EIT

Thermal-Fluid Systems | Energy | HVAC | CFD



BH02-001 / LOCATIONS AND DETAILS

REV	DATE	DESCRIPTION
A	2026-09-11	INITIAL PORTFOLIO ISSUE
		STATUS: DESIGN STUDY

HOLE LOCATION VIEW / SCALE 1:1

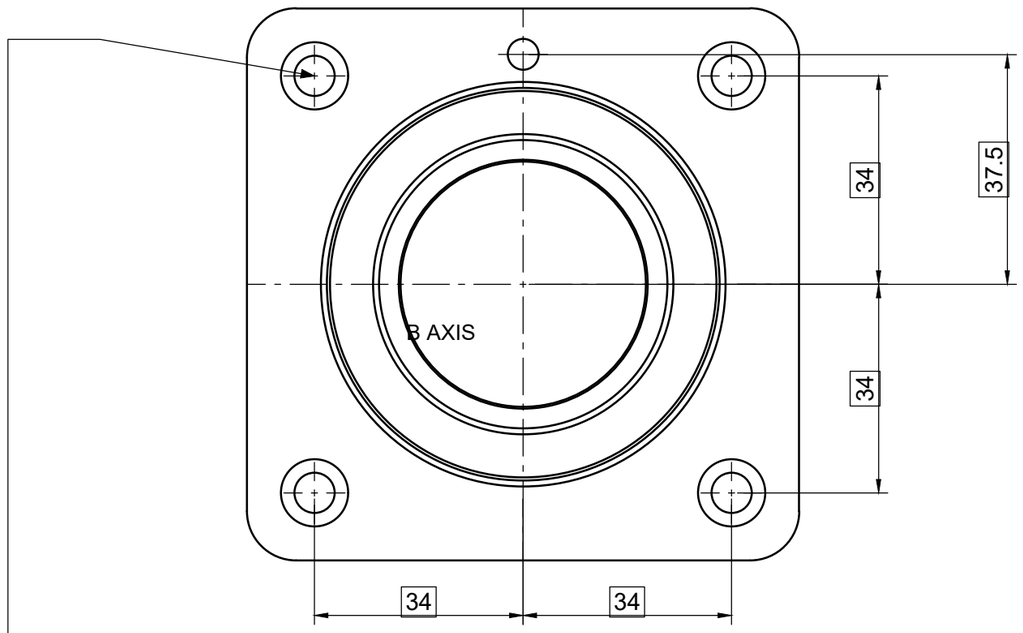

4X Ø6.6 +0.20 / 0 THRU

⌖	Ø0.20 Ⓜ	A	B	C

4X Ø11 +0.20 / 0 COUNTERBORE, 6 ±0.10 DEEP. SEE H.

⌖	Ø0.30	A	B	C

BOXED DIMENSIONS ARE BASIC.

C IS ON THE VERTICAL CENTERLINE THROUGH B.

DETAIL G / SCALE 6:1

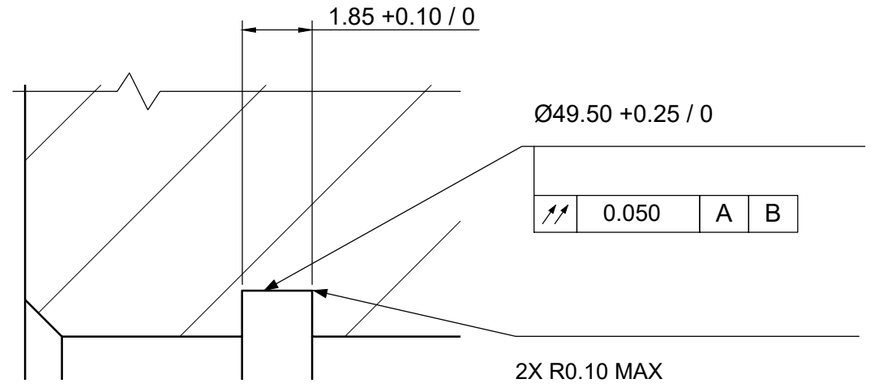

GROOVE START: 14.20 ±0.05 FROM BEARING SHOULDER.

GROOVE WIDTH AND START ARE AXIAL DIMENSIONS.

DETAIL H / SCALE 4:1

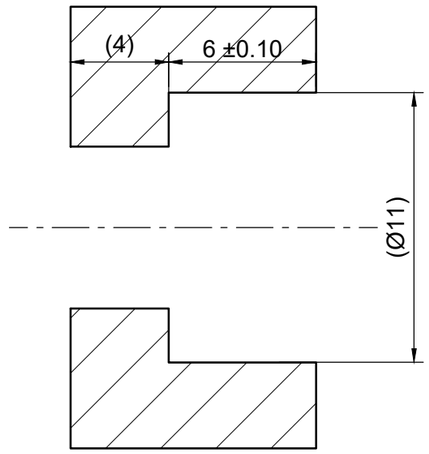

4 PLACES / SECTION THROUGH HOLE AXIS

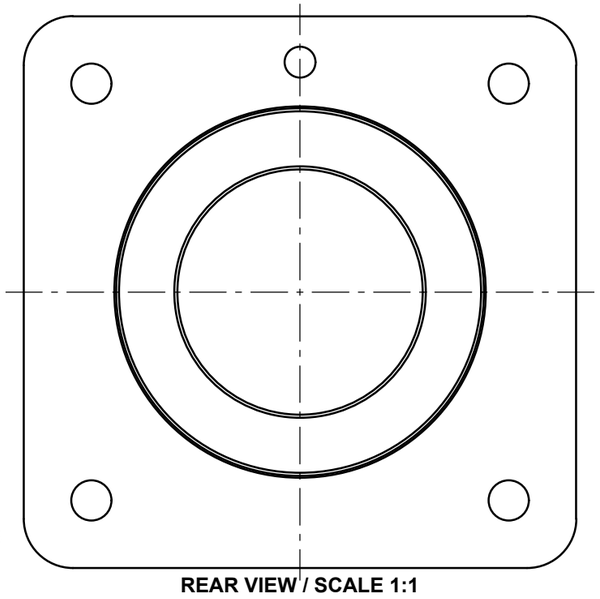

REAR VIEW / SCALE 1:1

MACHINING NOTES

8. BEARING BORE ENTRY: 1 × 45°. SHOULDER ROOT: R0.3 MAX.
9. PILOT END: 0.5 × 45°. PILOT ROOT: R0.3 MAX.
10. BOSS ROOT: R1 ±0.2. BOSS FRONT EDGE: 0.5 × 45°.
11. Ø40 BORE: 0.5 × 45° REAR; 0.3 × 45° AT SHOULDER.
12. RETAINING RING: ROTOR CLIP DHO-47ST N PD (DIN 472).
13. A = MOUNTING FACE; B = BEARING AXIS; C = CLOCK HOLE.
14. FLANGE CENTERED ON B; SIDES PARALLEL TO BASIC HOLE ROWS.

Ramin (Ray) Mashayekhi, M.Sc, M.Eng, EIT

FLANGED BEARING HOUSING

DRAWING No.	SHEET CONTENT
BH02-001	LOCATIONS AND DETAILS

MATERIAL: 6061-T6 ALUMINUM

UNITS	SCALE	SIZE	REV	SHEET
mm	**AS SHOWN**	**A3**	**A**	**2 / 2**

Ramin (Ray) Mashayekhi, M.Sc, M.Eng, EIT

Thermal-Fluid Systems | Energy | HVAC | CFD



MB01-001 / FORMED PART

REV	DATE	DESCRIPTION
A	2026-09-11	INITIAL PORTFOLIO ISSUE
		STATUS: DESIGN STUDY

TOP VIEW / 1:1

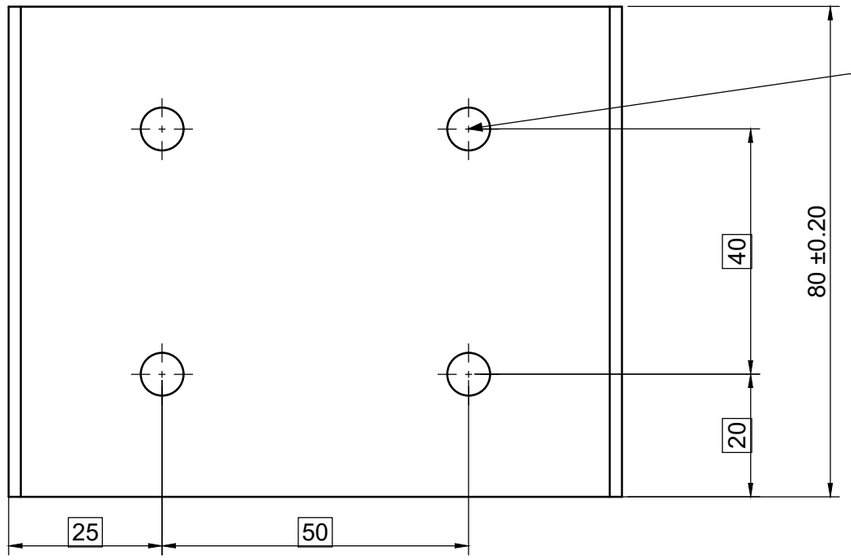

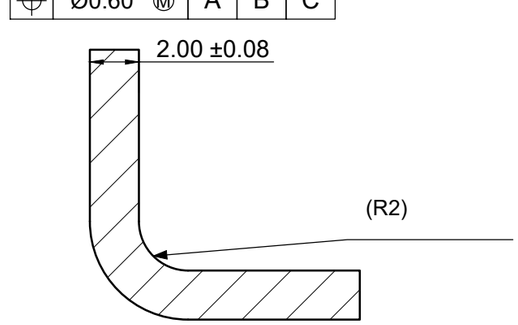

DETAIL J / 4:1

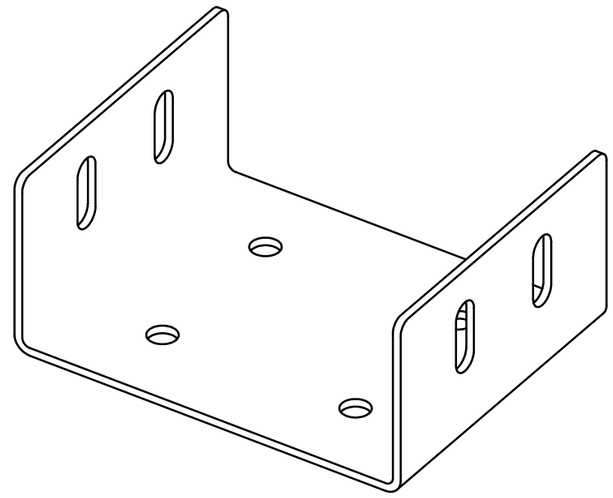

ISOMETRIC / REF

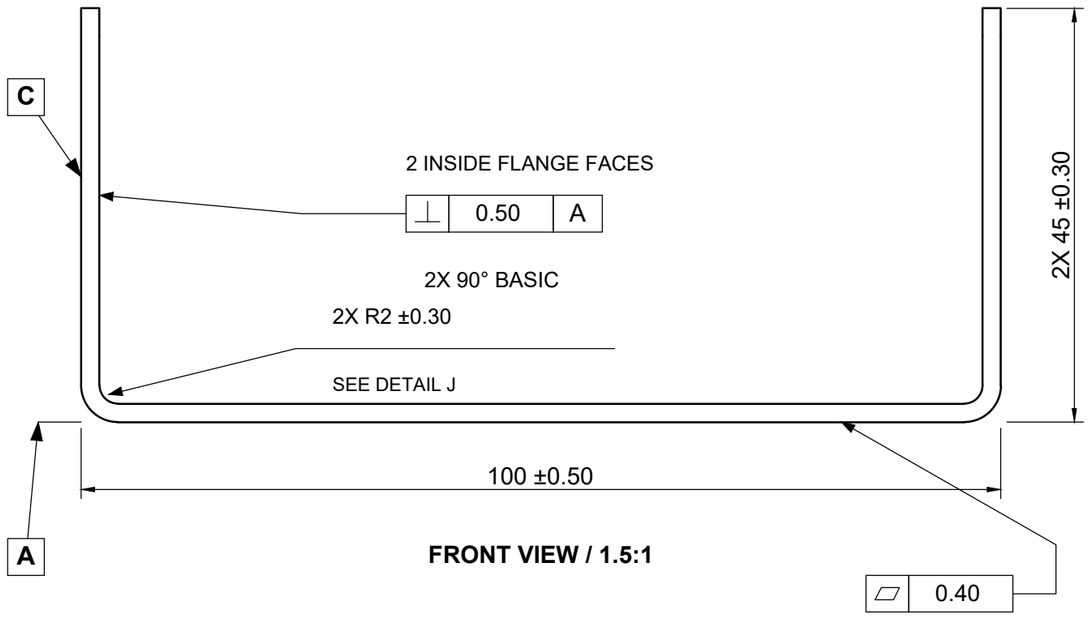

FRONT VIEW / 1.5:1

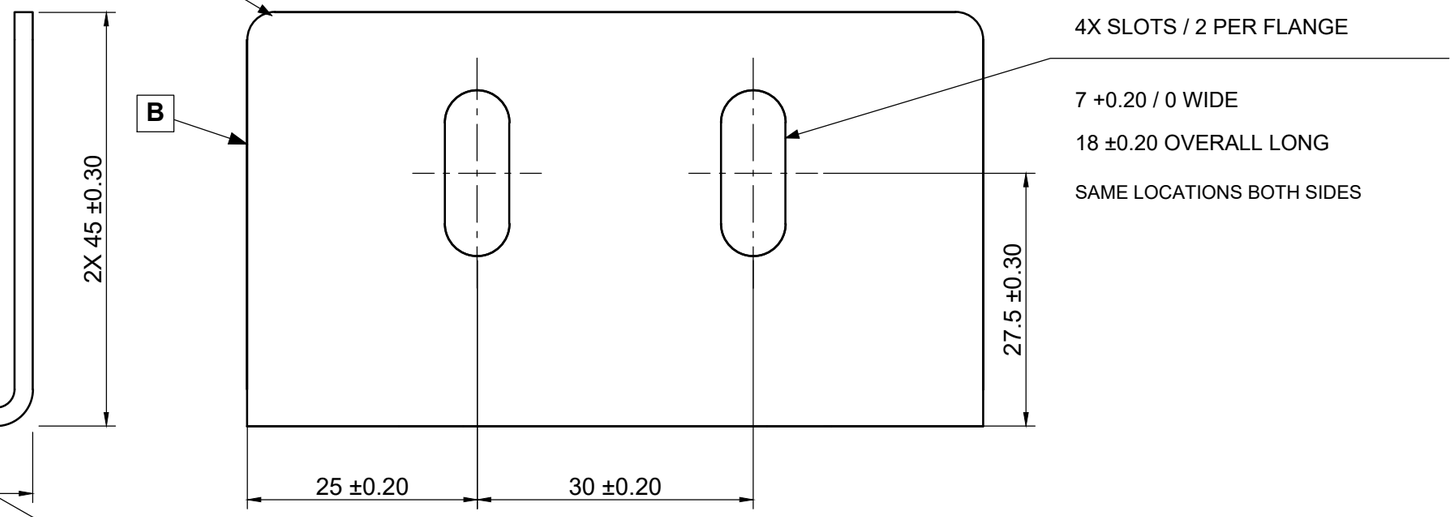

RIGHT VIEW / 1.5:1

FABRICATION NOTES

1. mm. GD&T: ASME Y14.5-2018. INSPECT FORMED PART FREE STATE.
2. MATERIAL: 5052-H32 SHEET, 2.00 ±0.08 THICK. NO COATING.
3. UNLESS SPECIFIED: LINEAR ±0.20; ANGULAR ±1°. BOXED = BASIC.
4. REMOVE BURRS; BREAK SHARP EDGES 0.1-0.2. RETAIN MILL FINISH.
5. FORM TWO BENDS UP. NO CRACKS AT BENDS. SEE SHEET 2.
6. FORMED REQUIREMENTS CONTROL. CONFIRM FLAT WITH BEND TRIAL.
7. A = BASE UNDERSIDE; B = FRONT CUT END; C = LEFT OUTSIDE FACE.

THIRD ANGLE

Ramin (Ray) Mashayekhi, M.Sc, M.Eng, EIT

FORMED MOUNTING BRACKET

DRAWING No.	SHEET CONTENT
MB01-001	FORMED PART

MATERIAL: 5052-H32 ALUMINUM, t = 2.00

UNITS	SCALE	SIZE	REV	SHEET
mm	**AS SHOWN**	**A3**	**A**	**1 / 2**

Ramin (Ray) Mashayekhi, M.Sc, M.Eng, EIT

Thermal-Fluid Systems | Energy | HVAC | CFD



MB01-001 / FLAT AND BENDS

REV	DATE	DESCRIPTION
A	2026-09-11	INITIAL PORTFOLIO ISSUE
		STATUS: DESIGN STUDY

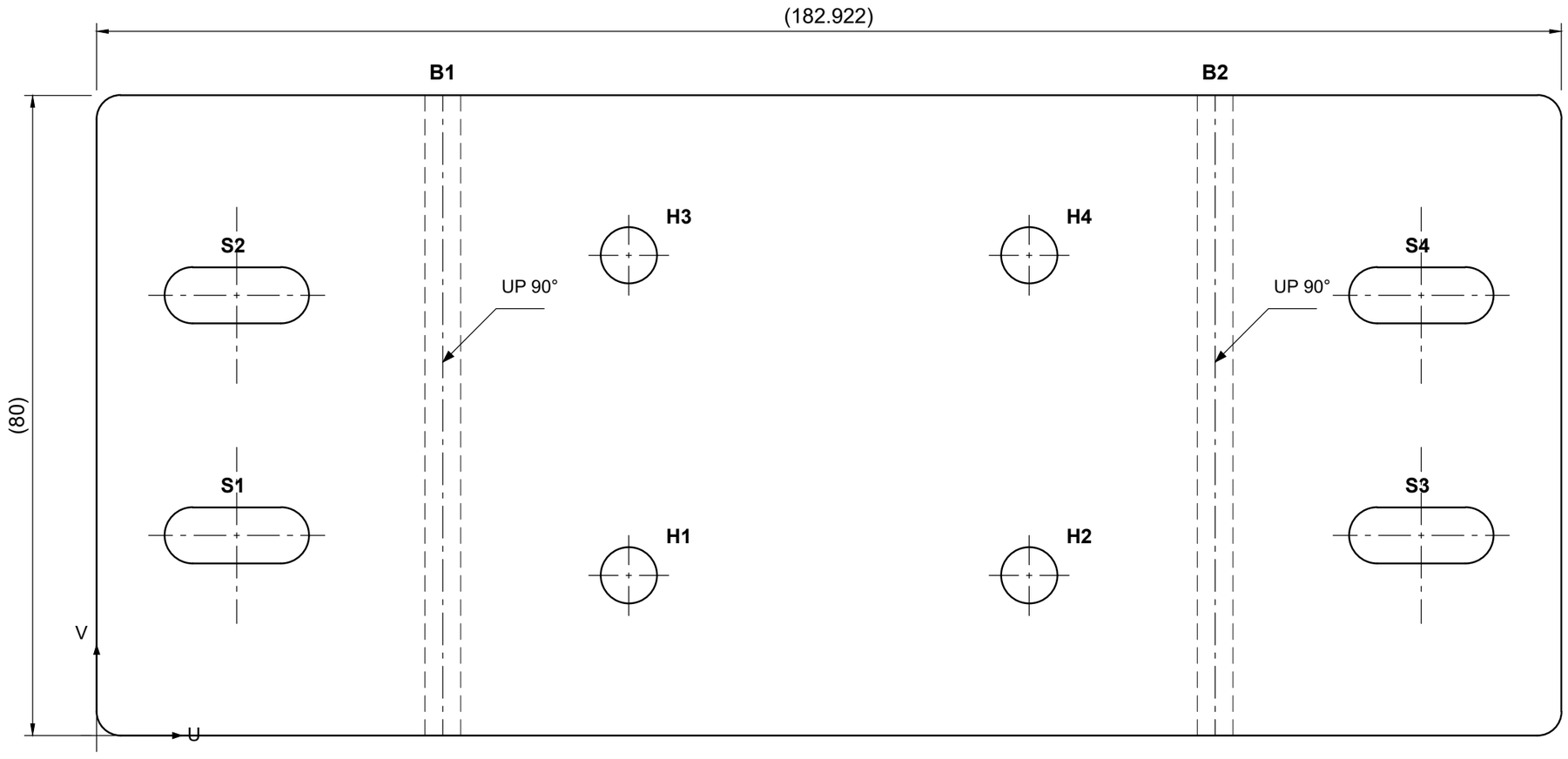

FLAT PATTERN / 1.5:1 / INSIDE SURFACE FACING VIEWER

DEVELOPMENT INPUTS

t = 2.00 mm

Ri = 2.00 mm

K = 0.420 ASSUMED

BEND ANGLE = 90°

BA = 4.461 mm / BEND

BD = 3.539 mm / BEND

LINES IN FLAT VIEW

BEND CENTER

TANGENT / REF

CUT EDGE

ROLLING DIRECTION

PARALLEL TO U

FLAT FEATURE CENTERS / PROCESS NOMINALS

SIZE TOLERANCES AND FORMED LOCATIONS: SHEET 1.

ID	FEATURE	U (mm)	V (mm)
H1	Ø7	66.461	20.000
H2	Ø7	116.461	20.000
H3	Ø7	66.461	60.000
H4	Ø7	116.461	60.000
S1	7 × 18	17.500	25.000
S2	7 × 18	17.500	55.000
S3	7 × 18	165.422	25.000
S4	7 × 18	165.422	55.000

ORIGIN = THEORETICAL SHARP CORNER. ROUNDED VALUES SHOWN.

ID	U (mm)	ANGLE	Ri	DIR.	SEQ.
B1	43.231	90°	2.00	UP	1
B2	139.692	90°	2.00	UP	2

FULL-WIDTH BENDS: V = 0 TO 80. TANGENTS ARE REFERENCE.

FLAT DIMENSIONS ARE NOMINAL; ADJUST TO MEET SHEET 1.

CUT-ONLY DXF HAS NO BEND LINES. VALIDATE TOOLING FIRST.

Ramin (Ray) Mashayekhi, M.Sc, M.Eng, EIT

FORMED MOUNTING BRACKET

DRAWING No.	SHEET CONTENT
MB01-001	FLAT AND BENDS

MATERIAL: 5052-H32 ALUMINUM, t = 2.00

UNITS	SCALE	SIZE	REV	SHEET
mm	**AS SHOWN**	**A3**	**A**	**2 / 2**

Ramin (Ray) Mashayekhi, M.Sc, M.Eng, EIT

Thermal-Fluid Systems | Energy | HVAC | CFD



SS01-001 / GENERAL ARRANGEMENT

REV	DATE	DESCRIPTION
A	2026-09-11	INITIAL PORTFOLIO ISSUE
		STATUS: DESIGN STUDY

TOP VIEW

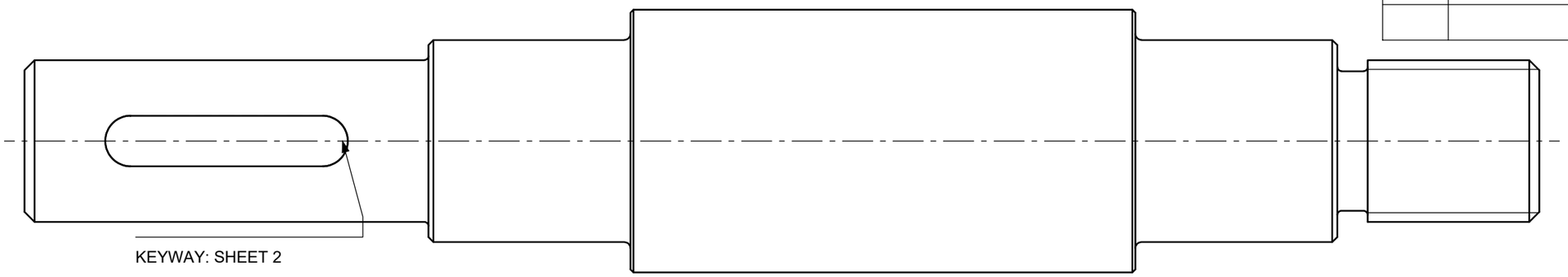

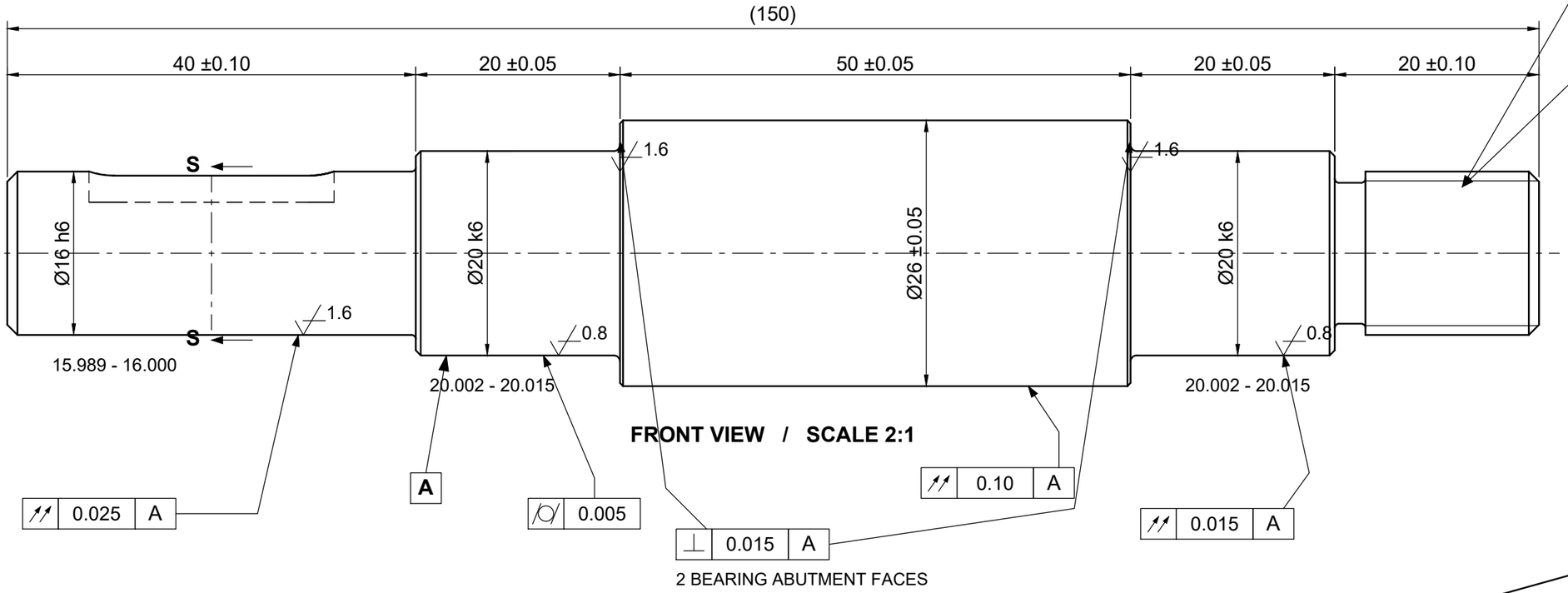

FRONT VIEW / SCALE 2:1

THREAD PITCH DIAMETER

⌖	Ø0.10	A

M16 × 1.5 - 6g

THREAD DETAIL: SHEET 2

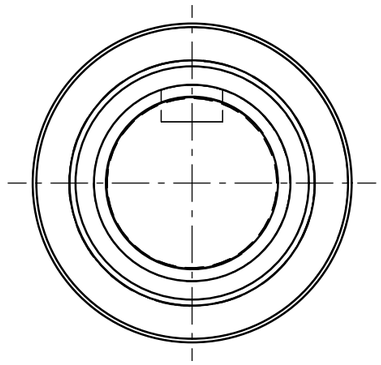

RIGHT VIEW
SCALE 2:1

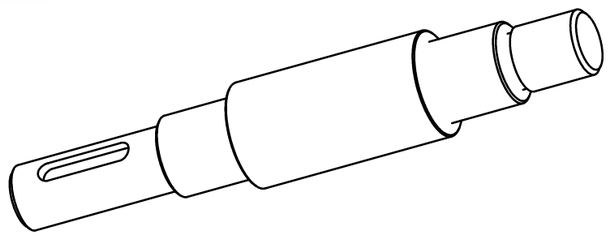

ISOMETRIC / REFERENCE

GENERAL NOTES

1. DIMENSIONS IN mm. INTERPRET GD&T PER ASME Y14.5-2018.
2. ISO 286 FITS. NUMERICAL LIMITS SHOWN ARE CONTROLLING.
3. UNLESS SPECIFIED: LINEAR ±0.10; ANGULAR ±0.5°.
4. SURFACE TEXTURE: Ra 3.2 µm MAX UNLESS MARKED; ISO 1302:2002.
5. REMOVE BURRS. UNDIMENSIONED EXTERNAL EDGES: 0.2-0.4 × 45°.
6. 2X BEARING SHOULDER ROOTS: R0.6 ±0.2. SEE SHEET 2.
7. NO PLATING. LIGHT RUST-PREVENTIVE OIL AFTER FINAL INSPECTION.
8. PARENTHESIZED DIMENSIONS ARE REFERENCE. DO NOT SCALE.
9. READ BOTH SHEETS TO MANUFACTURE THIS PART.

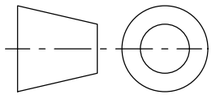

THIRD ANGLE

Ramin (Ray) Mashayekhi, M.Sc, M.Eng, EIT

STEPPED TRANSMISSION SHAFT

DRAWING No.	SHEET CONTENT
SS01-001	GENERAL ARRANGEMENT

MATERIAL: AISI 1045, NORMALIZED

UNITS	SCALE	SIZE	REV	SHEET
mm	**AS SHOWN**	**A3**	**A**	**1 / 2**

Ramin (Ray) Mashayekhi, M.Sc, M.Eng, EIT

Thermal-Fluid Systems | Energy | HVAC | CFD



SS01-001 / MACHINING DETAILS

REV	DATE	DESCRIPTION
A	2026-09-11	INITIAL PORTFOLIO ISSUE
		STATUS: DESIGN STUDY

KEYWAY PLAN DETAIL / SCALE 4:1

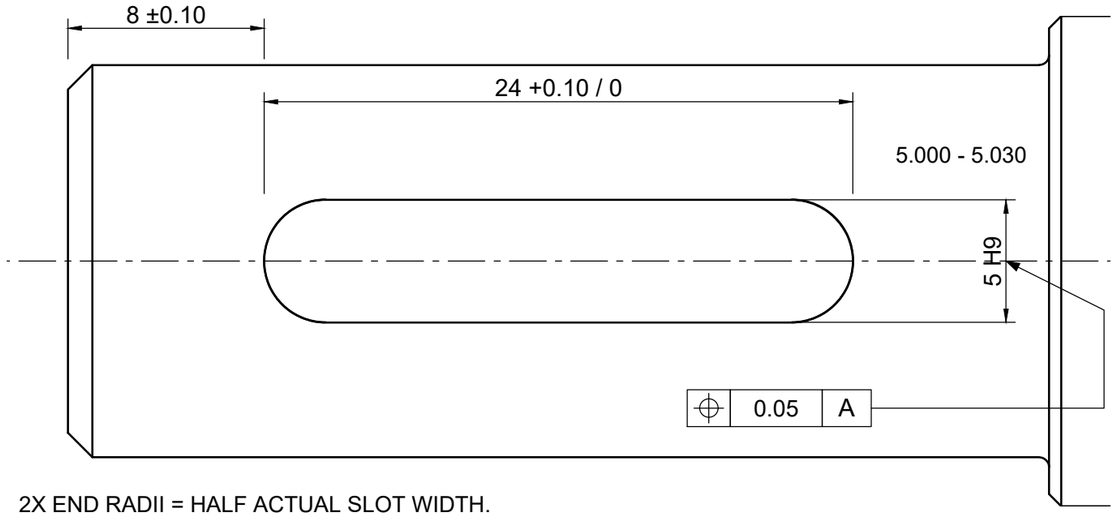

2X END RADII = HALF ACTUAL SLOT WIDTH.

LOCATION OF SLOT MEDIAN PLANE TO DATUM AXIS A.

SECTION S-S

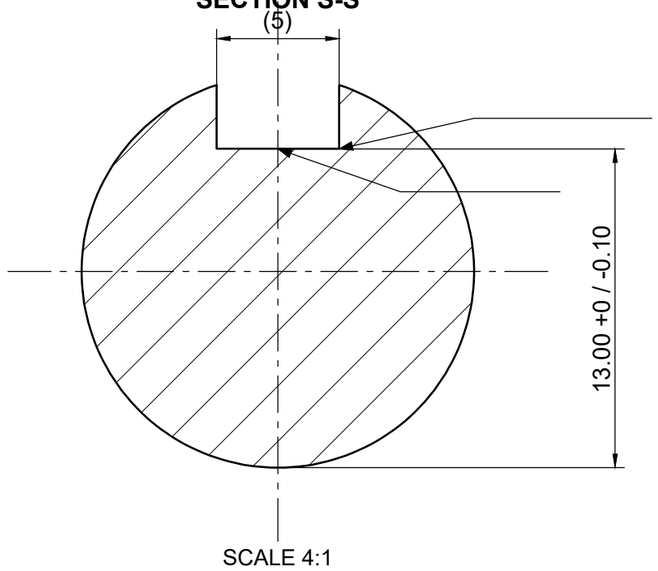

SCALE 4:1

BEARING SHOULDER DETAIL

SCALE 5:1 / 2 PLACES, MIRRORED

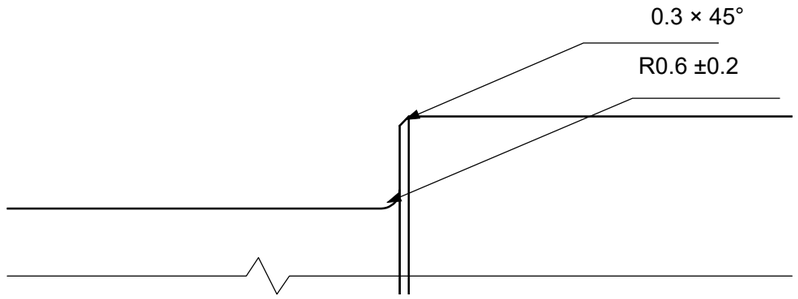

JOURNAL ENTRY CHAMFERS: 2X 0.5 × 45°.

Ø16 / Ø20 STEP ROOT AT DRIVE END: R0.4 ±0.1.

DRIVE END CHAMFER: 1 × 45° ±0.5°.

THREAD END DETAIL / SCALE 5:1

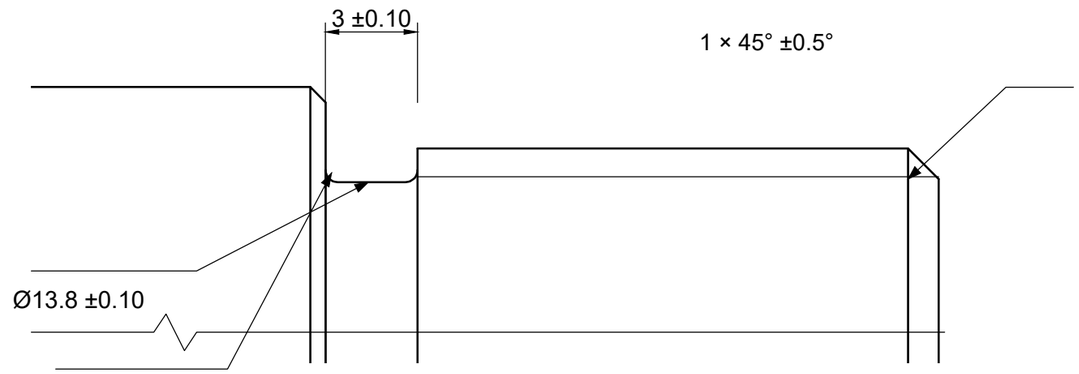

M16 × 1.5 - 6g / 14 MIN FULL THREAD

VERIFY WITH GO / NO-GO THREAD RING GAUGES.

MANUFACTURING NOTES

10. FINISH GRIND BEARING JOURNALS TO SIZE AND Ra 0.8 MAX.
11. KEEP JOURNAL ROOT RADII CLEAR OF THE BEARING CORNER.
12. METRIC THREAD: ISO 68-1 PROFILE; ISO 965-1 TOLERANCE.
13. KEYWAY IS A CLEARANCE-FIT DESIGN FOR A 5 × 5 × 22 KEY.
14. DO NOT REMOVE MATERIAL FROM DATUM FEATURES AFTER INSPECTION.
15. CENTER-DRILL FEATURES, IF USED, SHALL BE REMOVED IN FINISHING.

Ramin (Ray) Mashayekhi, M.Sc, M.Eng, EIT

STEPPED TRANSMISSION SHAFT

DRAWING No.	SHEET CONTENT
SS01-001	MACHINING DETAILS

MATERIAL: AISI 1045, NORMALIZED

UNITS	SCALE	SIZE	REV	SHEET
mm	**AS SHOWN**	**A3**	**A**	**2 / 2**

Ramin (Ray) Mashayekhi, M.Sc, M.Eng, EIT

Thermal-Fluid Systems | Energy | HVAC | CFD

