WB01-001 / GENERAL ASSEMBLY

REV	DATE	DESCRIPTION
A	2026-09-12	INITIAL PORTFOLIO ISSUE
		STATUS: DESIGN STUDY

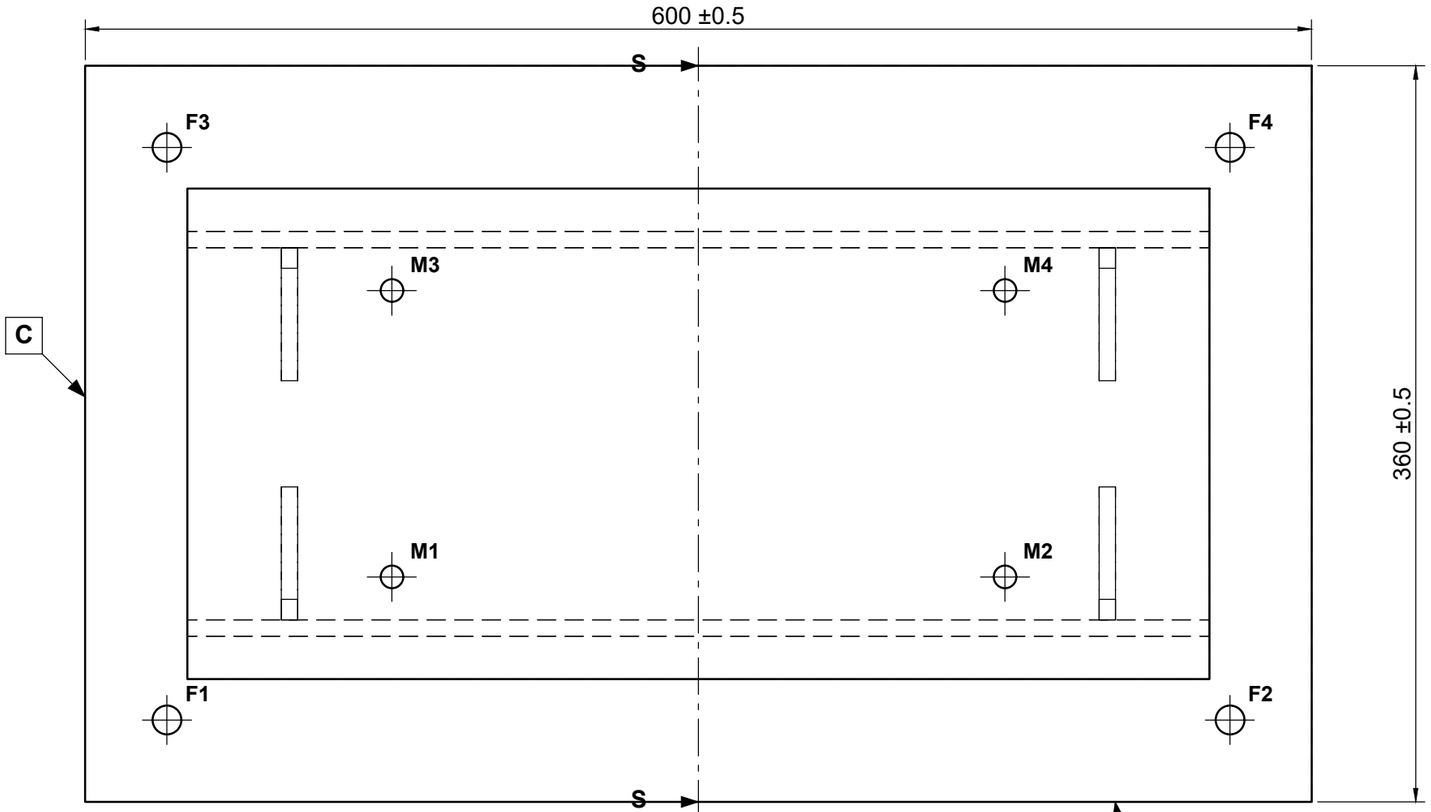

FRONT VIEW / 1:3

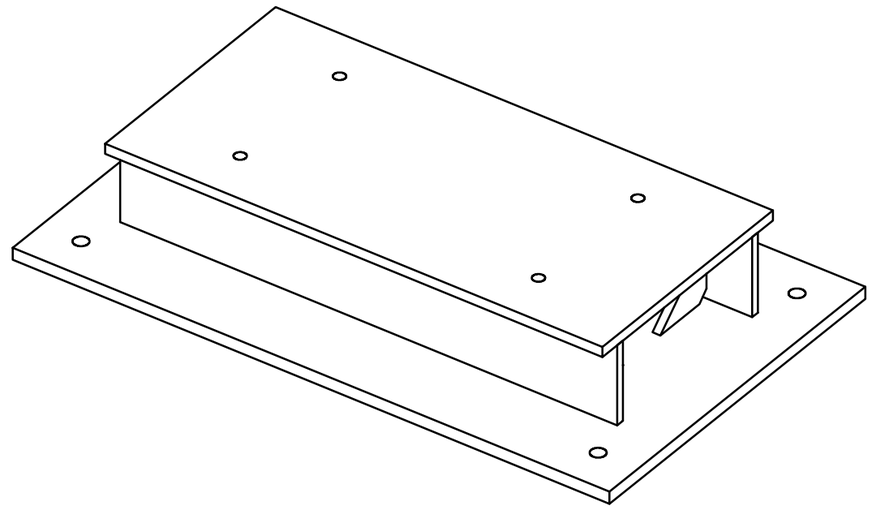

ISOMETRIC / REF

M1-M4: 4X Ø11 +0.30 / 0 THRU

⌖	Ø0.50 Ⓜ	A	B	C

F1-F4: 4X Ø14 +0.50 / 0 THRU

⌖	Ø1.00 Ⓜ	A	B	C

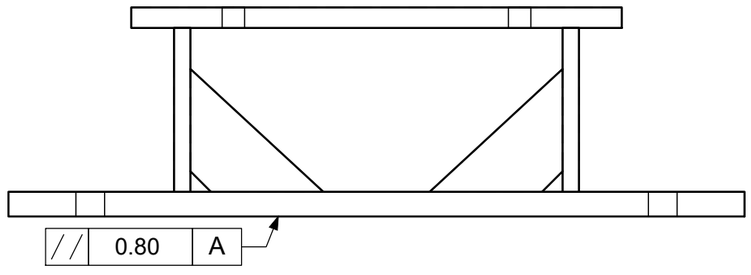

RIGHT VIEW / 1:3

GENERAL REQUIREMENTS

1. mm. GD&T: ASME Y14.5-2018. WELD SYMBOLS: AWS A2.4:2020.
2. A = MACHINED TOP FACE; B = FRONT BASE EDGE; C = LEFT BASE EDGE.
3. TOP CENTERED ON BASE IN X / Y. WEBS FLUSH WITH TOP PLATE ENDS.
4. GUSSET MIDPLANES: X = 100 AND 500 FROM C; ON INBOARD WEB FACES.
5. MACHINE FACE A AND ALL HOLES AFTER WELDING AND COOLING.
6. TOP PLATE: 10 MIN AFTER CLEANUP; 12 STOCK. (102) IS REFERENCE.
7. FAB LOCATIONS ±0.5; ANGLES ±0.5°. EDGE BREAK 0.3-0.5. NO COATING.
8. BLANKS: SHEET 3. WELDS / HOLE COORDINATES: SHEET 2. DEBURR.
9. DESIGN STUDY. EQUIPMENT LOADS AND ANCHORAGE NOT RATED.

THIRD ANGLE

Ramin (Ray) Mashayekhi, M.Sc, M.Eng, EIT

WELDED MACHINE BASE

DRAWING No.	SHEET CONTENT
WB01-001	GENERAL ASSEMBLY

MATERIAL: ASTM A36 / A36M STEEL PLATE

UNITS	SCALE	SIZE	REV	SHEET
mm	**AS SHOWN**	**A3**	**A**	**1 / 3**

WB01-001 / WELDS AND MACHINING

REV	DATE	DESCRIPTION
A	2026-09-12	INITIAL PORTFOLIO ISSUE
		STATUS: DESIGN STUDY

SECTION S-S / 1:2

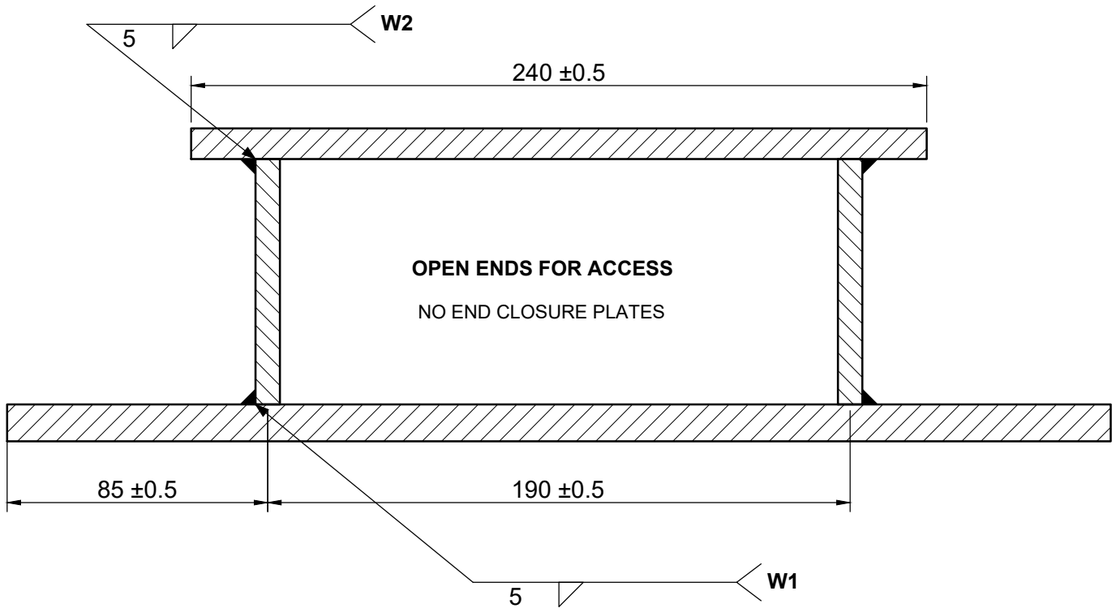

PARTIAL GUSSET DETAIL / 1:1

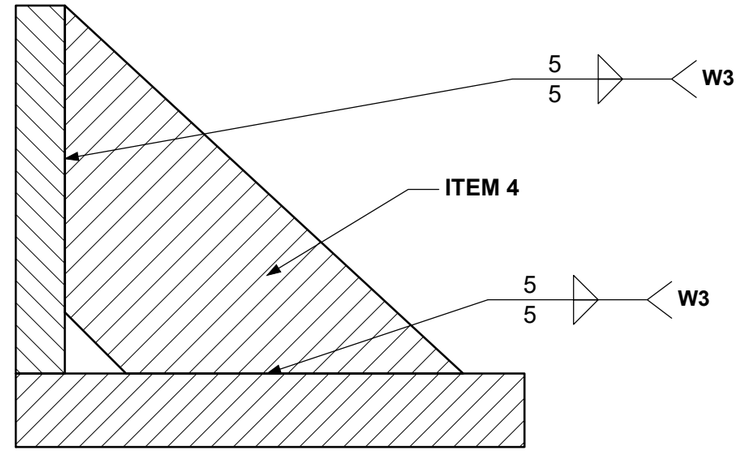

5 mm FILLETS BOTH SIDES OF GUSSET.
WELD VERTICAL AND HORIZONTAL CONTACT EDGES.
KEEP DIAGONAL EDGE AND ROOT RELIEF UNWELDED.

FABRICATION SEQUENCE

1. CUT AND DEBURR BLANKS. SET WEBS ON BASE; TACK AND CHECK SQUARE.
2. COMPLETE W1 ON THE TWO OUTBOARD SIDES. ADD THE FOUR GUSSETS.
3. WELD W3 BOTH SIDES OF EACH GUSSET BEFORE FITTING THE TOP PLATE.
4. FIT TOP BLANK; COMPLETE W2 ALONG BOTH OUTBOARD WEB EDGES.
5. BALANCE WELDS; COOL AND STRAIGHTEN AS NEEDED BEFORE MACHINING.
6. INSPECT FACE A, BASE UNDERSIDE, HOLES AND WELDS FREE STATE.

FINISHED HOLE COORDINATES

X FROM DATUM C; Y FROM DATUM B. ORIGIN: FRONT-LEFT BASE CORNER.

ID	FEATURE	X BASIC	Y BASIC
M1	TOP / Ø11	150.0	110.0
M2	TOP / Ø11	450.0	110.0
M3	TOP / Ø11	150.0	250.0
M4	TOP / Ø11	450.0	250.0
F1	BASE / Ø14	40.0	40.0
F2	BASE / Ø14	560.0	40.0
F3	BASE / Ø14	40.0	320.0
F4	BASE / Ø14	560.0	320.0

ALL COORDINATES BASIC. SIZE / POSITION REQUIREMENTS: SHEET 1.

WELD SCHEDULE

ID	SIZE	LOCATION / EXTENT	QUANTITY
W1	5 FILLET	WEB TO BASE, OUTBOARD ONLY	2 X 500 mm
W2	5 FILLET	WEB TO TOP, OUTBOARD ONLY	2 X 500 mm
W3	5 / BOTH	GUSSET TO WEB + BASE	4 GUSSETS

SIZES ARE FILLET LEG LENGTHS. CONTINUOUS OVER CONTACT.
W3: 50 mm VERTICAL + 55 mm HORIZONTAL, EACH SIDE.
USE FABRICATOR-APPROVED WPS. 100% VISUAL INSPECTION.
NO CRACKS. REMOVE SLAG / SPATTER; NO WELD ON FACE A.

Ramin (Ray) Mashayekhi, M.Sc, M.Eng, EIT

WELDED MACHINE BASE

DRAWING No.	SHEET CONTENT
WB01-001	WELDS AND MACHINING

MATERIAL: ASTM A36 / A36M STEEL PLATE

UNITS	SCALE	SIZE	REV	SHEET
mm	**AS SHOWN**	**A3**	**A**	**2 / 3**

WB01-001 / CUT PARTS AND BOM

REV	DATE	DESCRIPTION
A	2026-09-12	INITIAL PORTFOLIO ISSUE
		STATUS: DESIGN STUDY

01 / BASE PLATE / QTY 1 / 1:4

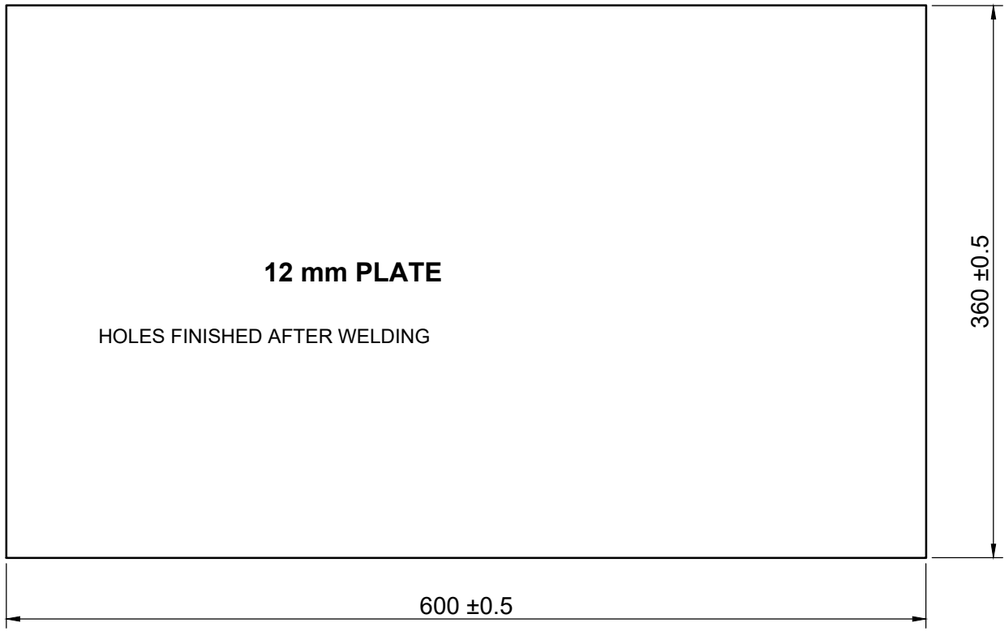

02 / TOP BLANK / QTY 1 / 1:4

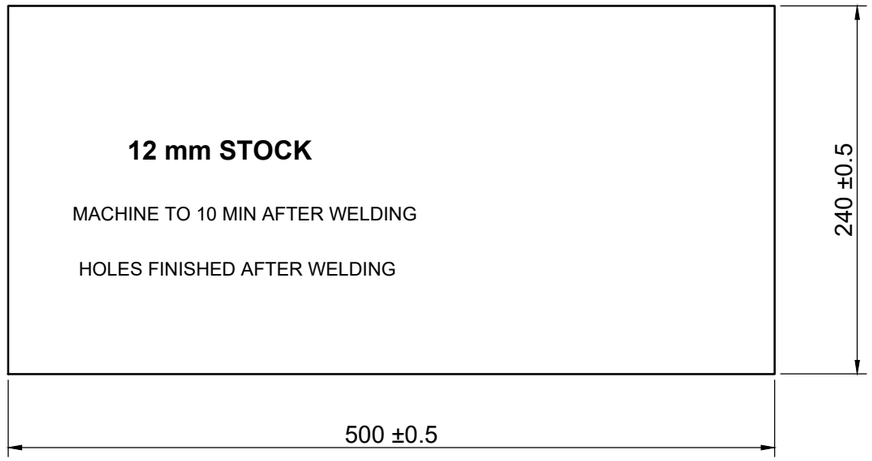

03 / WEB PLATE / QTY 2 / 1:3

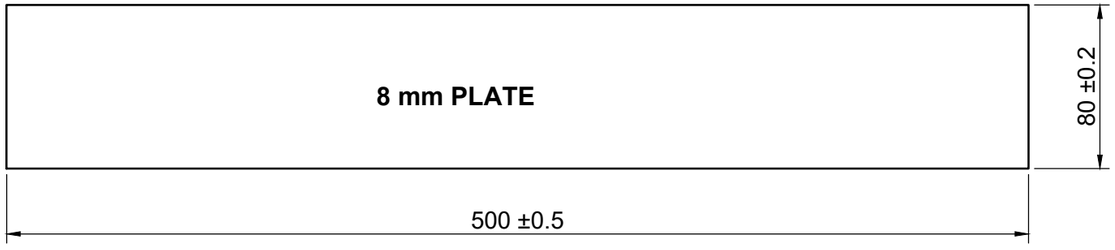

04 / GUSSET / QTY 4 / 1:1

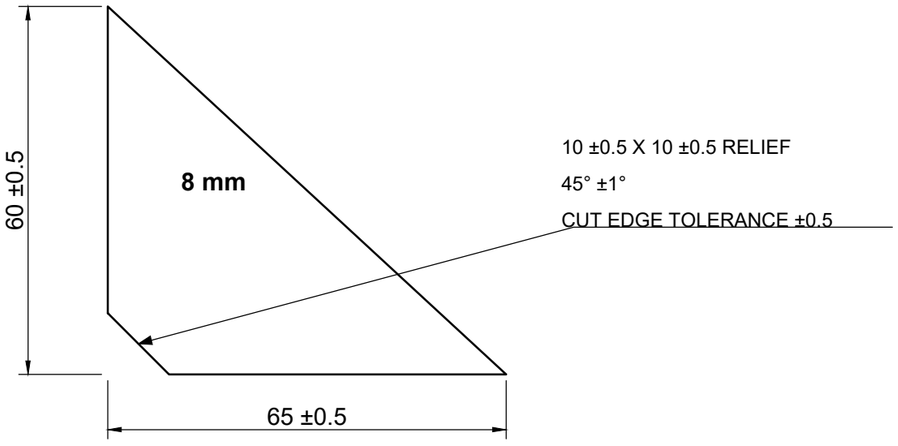

BILL OF MATERIALS / PLATE BLANKS

ITEM	QTY	DESCRIPTION	L X W	THICK	MATERIAL
1	1	BASE	600 X 360	12	ASTM A36/A36M
2	1	TOP	500 X 240	12 STOCK	ASTM A36/A36M
3	2	WEB	500 X 80	8	ASTM A36/A36M
4	4	GUSSET	65 X 60	8	ASTM A36/A36M

QTY PER BASE: 8 PIECES. CUT DXFs CONTAIN BLANK OUTLINES ONLY.

PLATE THICKNESS: STOCK TOLERANCE; FINISHED REQUIREMENTS: SHEET 1.

Ramin (Ray) Mashayekhi, M.Sc, M.Eng, EIT

WELDED MACHINE BASE

DRAWING No.	SHEET CONTENT
WB01-001	CUT PARTS AND BOM

MATERIAL: ASTM A36 / A36M STEEL PLATE

UNITS	SCALE	SIZE	REV	SHEET
mm	**AS SHOWN**	**A3**	**A**	**3 / 3**