SS01-001 / GENERAL ARRANGEMENT

REV	DATE	DESCRIPTION
A	2026-09-11	INITIAL PORTFOLIO ISSUE
		STATUS: DESIGN STUDY

TOP VIEW

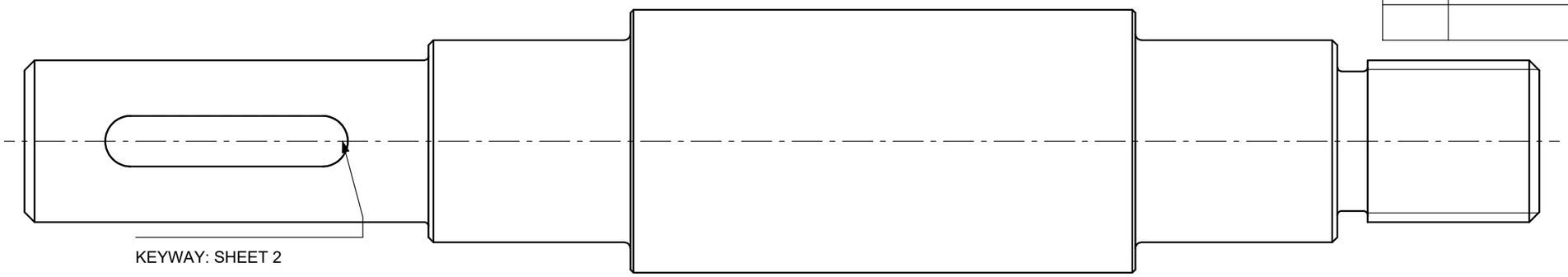

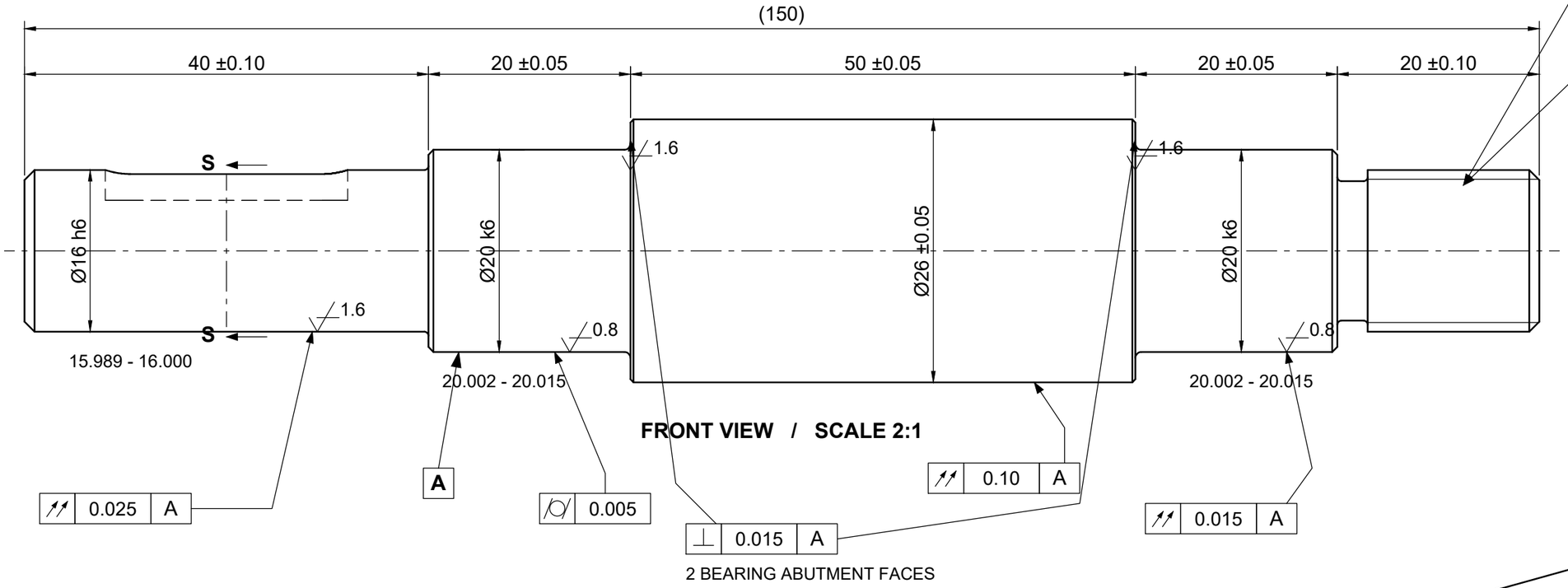

FRONT VIEW / SCALE 2:1

2 BEARING ABUTMENT FACES

THREAD PITCH DIAMETER

⌖	Ø0.10	A

M16 × 1.5 - 6g

THREAD DETAIL: SHEET 2

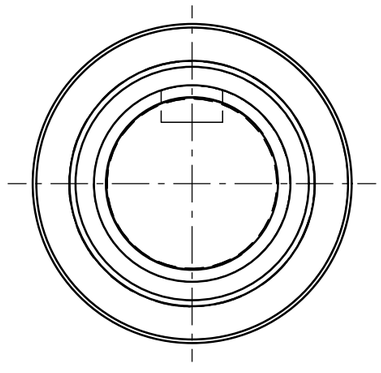

RIGHT VIEW
SCALE 2:1

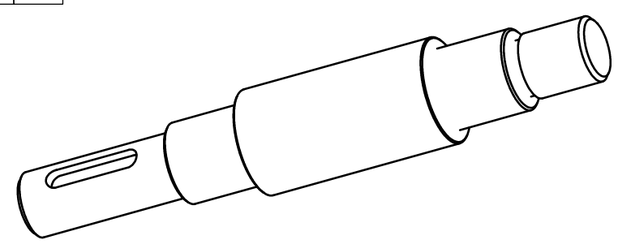

ISOMETRIC / REFERENCE

GENERAL NOTES

1. DIMENSIONS IN mm. INTERPRET GD&T PER ASME Y14.5-2018.
2. ISO 286 FITS. NUMERICAL LIMITS SHOWN ARE CONTROLLING.
3. UNLESS SPECIFIED: LINEAR ±0.10; ANGULAR ±0.5°.
4. SURFACE TEXTURE: Ra 3.2 µm MAX UNLESS MARKED; ISO 1302:2002.
5. REMOVE BURRS. UNDIMENSIONED EXTERNAL EDGES: 0.2-0.4 × 45°.
6. 2X BEARING SHOULDER ROOTS: R0.6 ±0.2. SEE SHEET 2.
7. NO PLATING. LIGHT RUST-PREVENTIVE OIL AFTER FINAL INSPECTION.
8. PARENTHESIZED DIMENSIONS ARE REFERENCE. DO NOT SCALE.
9. READ BOTH SHEETS TO MANUFACTURE THIS PART.

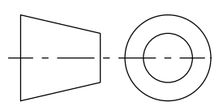

THIRD ANGLE

RAMIN / MECHANICAL DESIGN PORTFOLIO

STEPPED TRANSMISSION SHAFT

DRAWING No.	SHEET CONTENT
SS01-001	GENERAL ARRANGEMENT

MATERIAL: AISI 1045, NORMALIZED

UNITS	SCALE	SIZE	REV	SHEET
mm	**AS SHOWN**	**A3**	**A**	**1 / 2**

SS01-001 / MACHINING DETAILS

REV	DATE	DESCRIPTION
A	2026-09-11	INITIAL PORTFOLIO ISSUE
		STATUS: DESIGN STUDY

KEYWAY PLAN DETAIL / SCALE 4:1

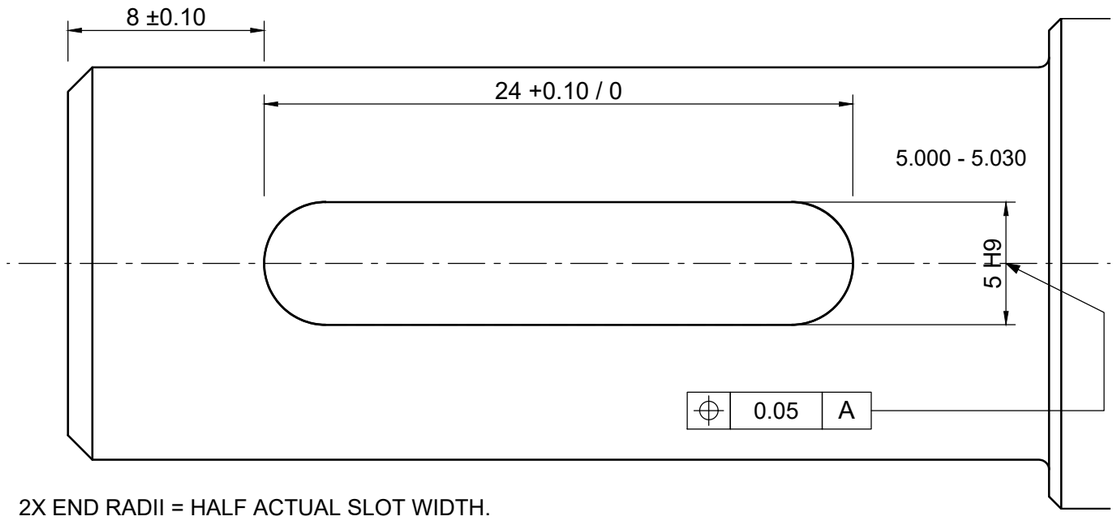

2X END RADII = HALF ACTUAL SLOT WIDTH.

LOCATION OF SLOT MEDIAN PLANE TO DATUM AXIS A.

SECTION S-S

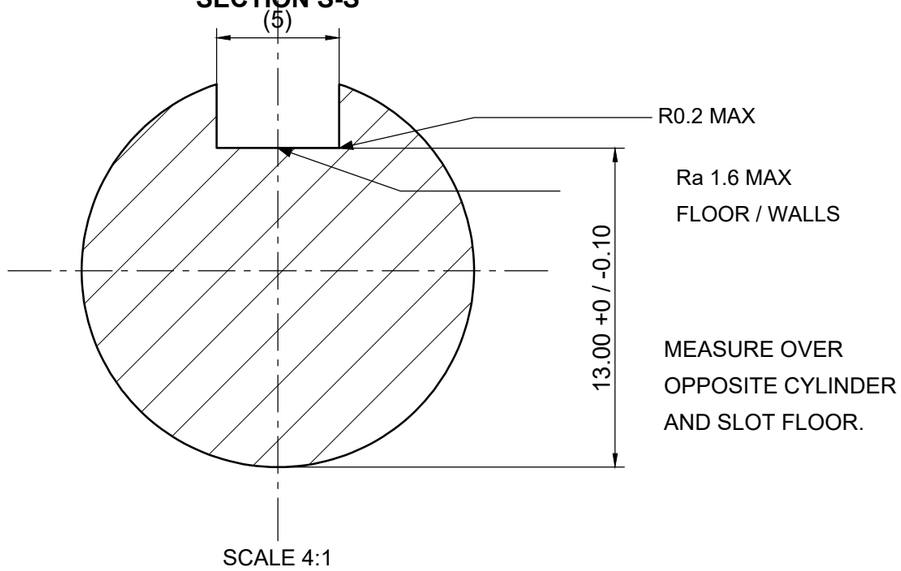

SCALE 4:1

BEARING SHOULDER DETAIL

SCALE 5:1 / 2 PLACES, MIRRORED

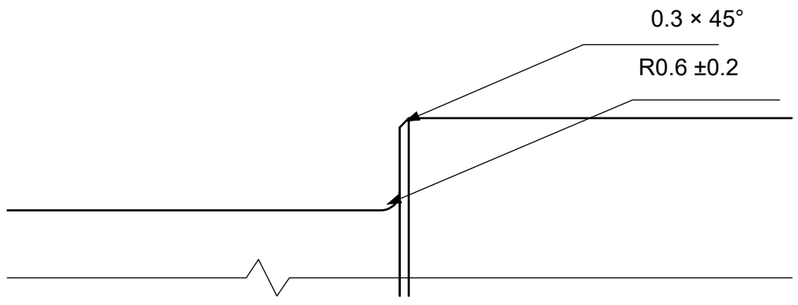

JOURNAL ENTRY CHAMFERS: 2X 0.5 × 45°.

Ø16 / Ø20 STEP ROOT AT DRIVE END: R0.4 ±0.1.

DRIVE END CHAMFER: 1 × 45° ±0.5°.

THREAD END DETAIL / SCALE 5:1

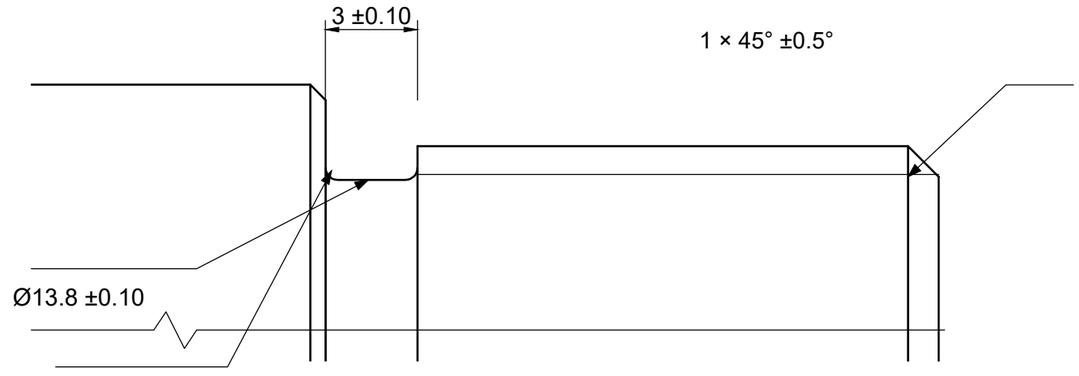

M16 × 1.5 - 6g / 14 MIN FULL THREAD

VERIFY WITH GO / NO-GO THREAD RING GAUGES.

MANUFACTURING NOTES

10. FINISH GRIND BEARING JOURNALS TO SIZE AND Ra 0.8 MAX.
11. KEEP JOURNAL ROOT RADII CLEAR OF THE BEARING CORNER.
12. METRIC THREAD: ISO 68-1 PROFILE; ISO 965-1 TOLERANCE.
13. KEYWAY IS A CLEARANCE-FIT DESIGN FOR A 5 × 5 × 22 KEY.
14. DO NOT REMOVE MATERIAL FROM DATUM FEATURES AFTER INSPECTION.
15. CENTER-DRILL FEATURES, IF USED, SHALL BE REMOVED IN FINISHING.

RAMIN / MECHANICAL DESIGN PORTFOLIO

STEPPED TRANSMISSION SHAFT

DRAWING No.	SHEET CONTENT
SS01-001	MACHINING DETAILS

MATERIAL: AISI 1045, NORMALIZED

UNITS	SCALE	SIZE	REV	SHEET
mm	**AS SHOWN**	**A3**	**A**	**2 / 2**