CP / 01

COLD-PLATE BASE / PLAN

CP01-001 / 6061-T6 / thermal-contact plate with machined coolant passages

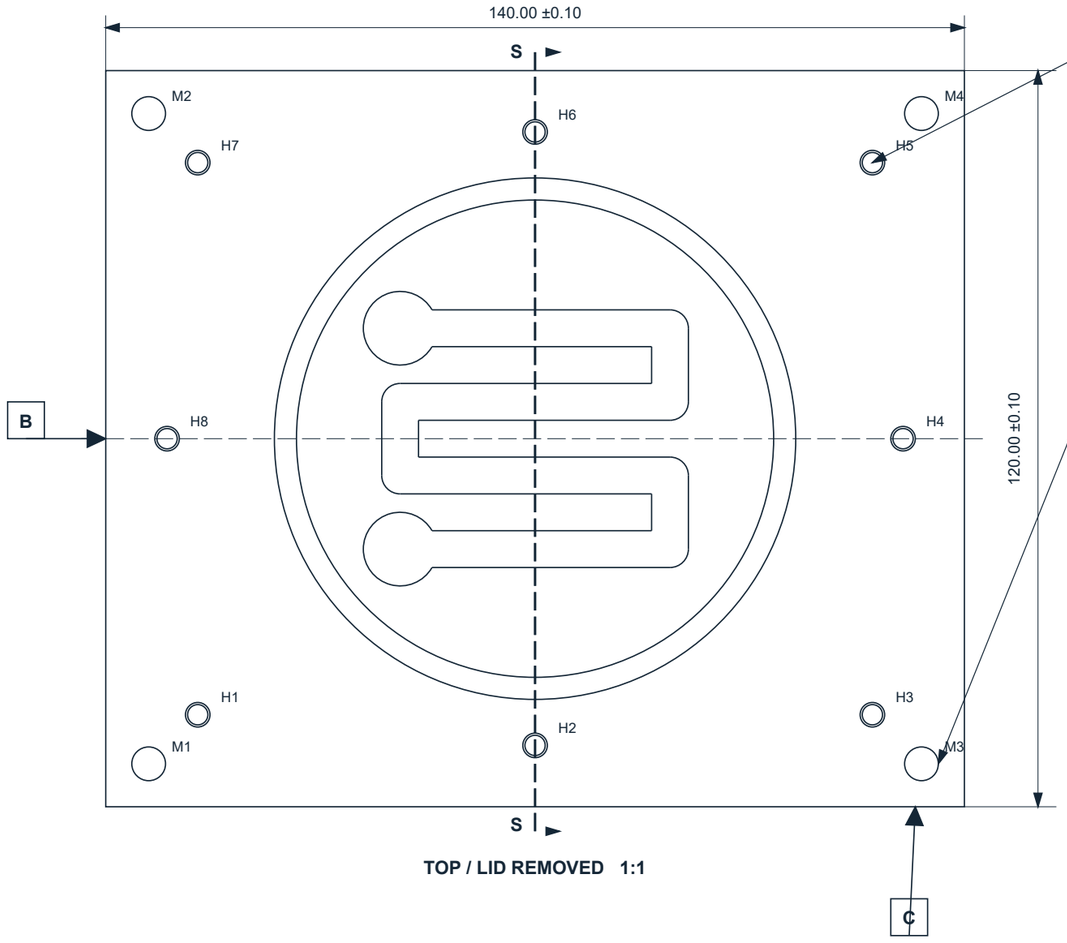

TOP / LID REMOVED 1:1

8X H1-H8: M4 × 0.7 - 6H

6.0 MIN FULL THREAD; TAP DRILL 8.0 MAX

Total drill depth includes point. From top face S.

⌖	Ø0.10	Ⓟ 8	A	B	C

Thread axes at RFS; projected zone 8 above face S.

4X M1-M4: Ø5.50 +0.20 / -0 THRU

⌖	Ø0.20	Ⓜ	A	B	C

CHANNEL SURFACES

⌓	0.20	A	B	C

All wetted walls/floors; Ra 3.2 µm max.

Nominal floor Z6 BASIC from A; see section on sheet 2.

CENTERLINE PATH / ALL VALUES BASIC

(48,42) > (92,42) > (92,54) > (48,54)
> (48,66) > (92,66) > (92,78) > (48,78)

Sweep Ø6 tool envelope along path; tangent end caps R3.

2X endpoint pockets Ø12 BASIC, centered (48,42), (48,78).

Channel width 6 BASIC; transition geometry is the tool sweep.

CIRCULAR GROOVE LOCATION

Ø85 groove, center (70,60) BASIC; detail on sheet 2.

BASIC HOLE COORDINATES / FROM B AND C

H1 (15,15) H2 (70,10) H3 (125,15) H4 (130,60)
H5 (125,105) H6 (70,110) H7 (15,105) H8 (10,60)
4X chassis: (7,7), (133,7), (7,113), (133,113).
Coordinate order is (X,Y); all tabulated locations are BASIC.

DATUM ORIGIN

A = bottom thermal-contact face (Z0). B = left side (X0). C = lower side (Y0).

All XY geometry is referenced to the intersection of B and C projected onto A.

Edges shown sharp in STEP: deburr 0.10-0.20 except seal edges; see sheet 2.

CP / 01

BASE / SECTION & SEAL GLAND

CP01-001 / contact flatness, sealing land and groove definition

A: THERMAL-CONTACT FACE

⏥	0.040

Ra 0.8 µm max over entire face A.

S: TOP SEALING LAND / Z10.00 ±0.05

⏥	0.020			
//	0.030	A		

Ra 0.8 µm max. Control applies to all top lands/ribs.

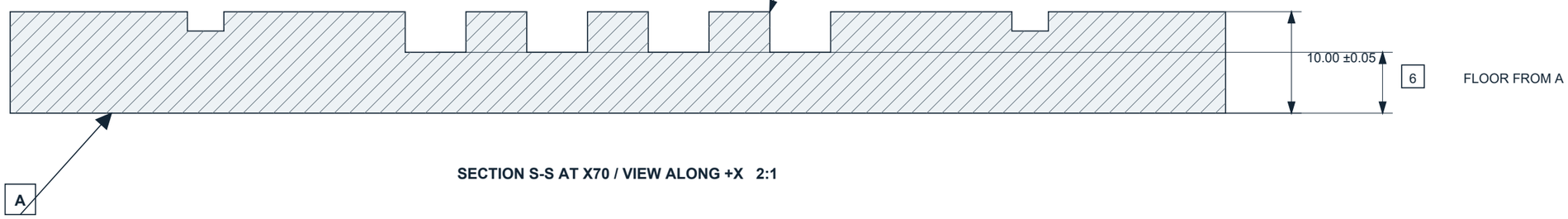

SECTION S-S AT X70 / VIEW ALONG +X 2:1

SEAL GROOVE D1 / LOCAL SECTION 10:1

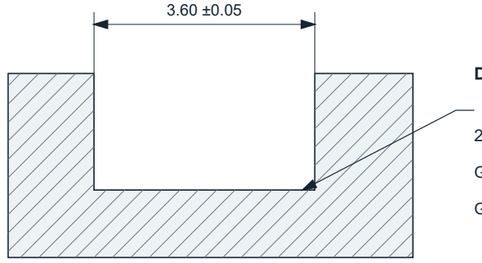

DEPTH 1.90 ±0.03 FROM LOCAL S

2X FLOOR CORNERS R0.10-0.20

Groove mouth edges R0.05-0.10, burr-free.

Groove floor/walls Ra 1.6 µm max.

CIRCULAR GROOVE

OD Ø85.00 ±0.05; radial width 3.60 ±0.05.

Center (70,60) BASIC; derived ID Ø77.80 REF.

⌖	Ø0.10	A	B	C

Position applies to groove OD cylinder axis.

Depth measured normal to local sealing land S.

O-RING: nominal ID80 × CS2.50

EPDM 70 Shore A is an assumed material selection.

SIDE-DATUM ORIENTATION

⊥	0.050	A

SIDE B

⊥	0.050	A	B

SIDE C

Plane controls have no diameter symbol. Datums B/C are planar surfaces.

General: millimetres, ASME Y14.5-2018, 20 °C, unrestrained. Linear ±0.10; angles ±0.5° unless specified.

All basic locations are theoretically exact; profile controls channel geometry. Do not add ± tolerances to the basic path.

Unspecified surfaces Ra 3.2 µm max. Keep A and S free of dents; no coating on wetted/sealing/contact surfaces.

Groove corner radii and small edge breaks are drawing requirements omitted from nominal STEP geometry.

CP / 01 BOLTED LID / PORT INTERFACES

CP01-002 / 6061-T6 / independent part datums A, B and C

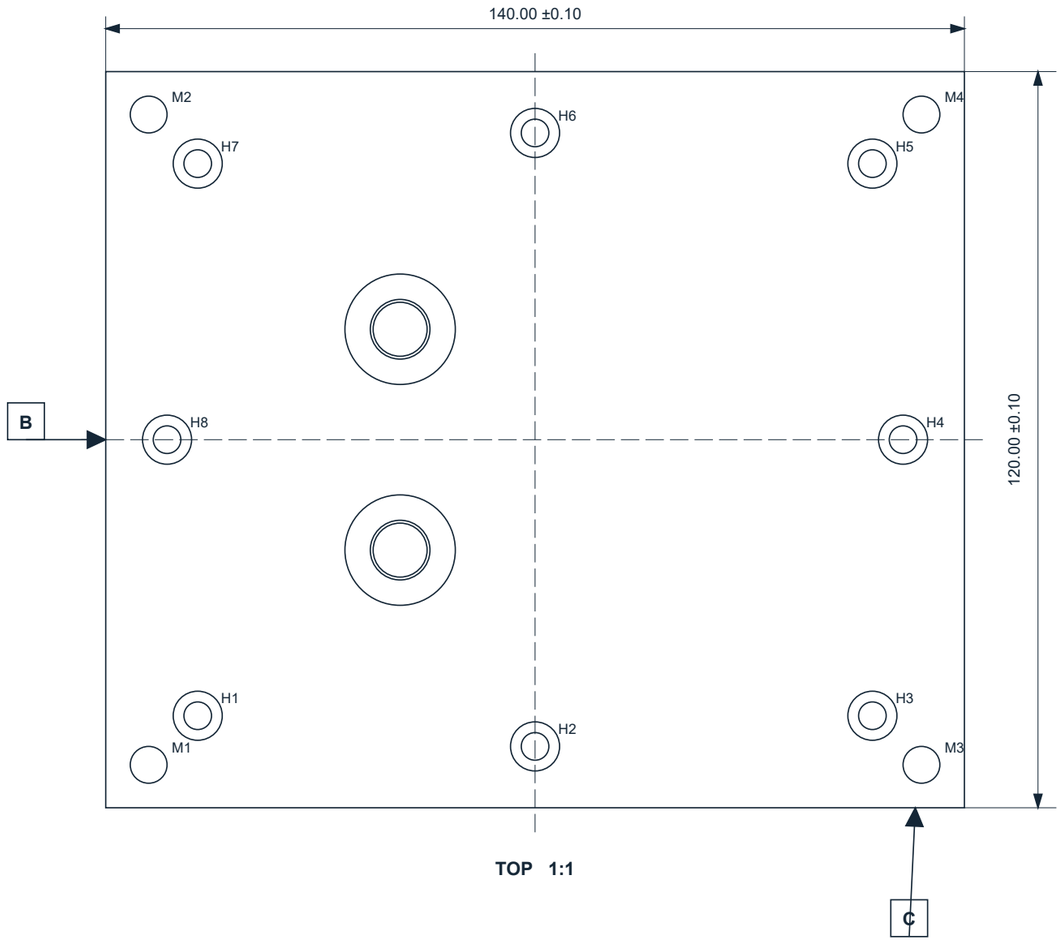

TOP 1:1

8X H1-H8: Ø4.50 +0.20 / -0 THRU

⌖	Ø0.15 Ⓜ	A	B	C

8X CBORE Ø8.00 +0.20 / -0; DEPTH 3.00 ±0.05

⌖	Ø0.30	A	B	C

All locations match base H1-H8 basic coordinates.

4X CHASSIS CLEARANCE: Ø6.00 +0.20 / -0 THRU

⌖	Ø0.20 Ⓜ	A	B	C

2X G1/8 INTERNAL PORTS / ISO 228-1

8.0 MIN FULL THREAD BELOW SPOTFACE; Ø8.8 DRILL THRU.

Centers (48,42), (48,78), BASIC. No thread sealant required

by this concept: use a fitting with a bonded face-seal washer.

⌖	Ø0.20	A	B	C

⊥	Ø0.050	A

Controls apply to thread pitch-cylinder axes, at RFS.

2X SPOTFACE Ø18.0 +0.2 / -0, DEPTH 0.20 ±0.05

//	0.030	A

⌖	Ø0.30	A	B	C

Ra 1.6 µm max; same basic centers as the ports.

Port thread major diameter is modeled; helical threads omitted.

PORT SECTION / 2:1

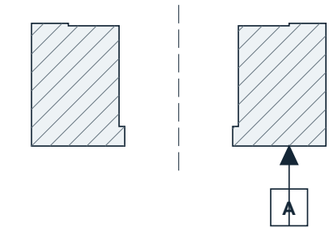

Section through either port.

BASIC HOLE COORDINATES / FROM B AND C

H1 (15,15) H2 (70,10) H3 (125,15) H4 (130,60)

H5 (125,105) H6 (70,110) H7 (15,105) H8 (10,60)

4X chassis: (7,7), (133,7), (7,113), (133,113).

Coordinate order is (X,Y); all tabulated locations are BASIC.

A/B/C on this sheet belong to the lid. Lid A seats against base S; base A remains the thermal-contact face.

Port fittings are purchased parts: verify G1/8 thread engagement, washer OD <= 18 and coolant compatibility.

General tolerances, edge breaks and temperature basis as sheet 2; sealing edges shall be burr-free.

LID DATUM A = UNDERSIDE SEALING FACE

▱	0.020

Ra 0.8 µm max

Thickness 10.00 ±0.05. Other surfaces Ra 3.2 µm max.

⊥	0.050	A

SIDE B

⊥	0.050	A	B

SIDE C

ASSEMBLY & COOLANT ROUTE

CP01-100 / bolted construction / replaceable perimeter seal

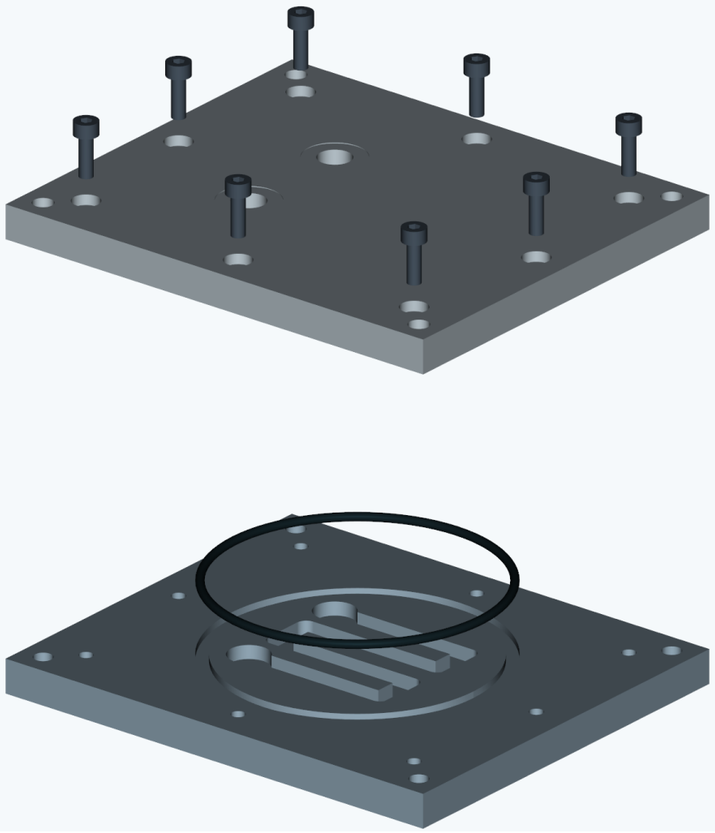

EXPLODED ASSEMBLY / NTS

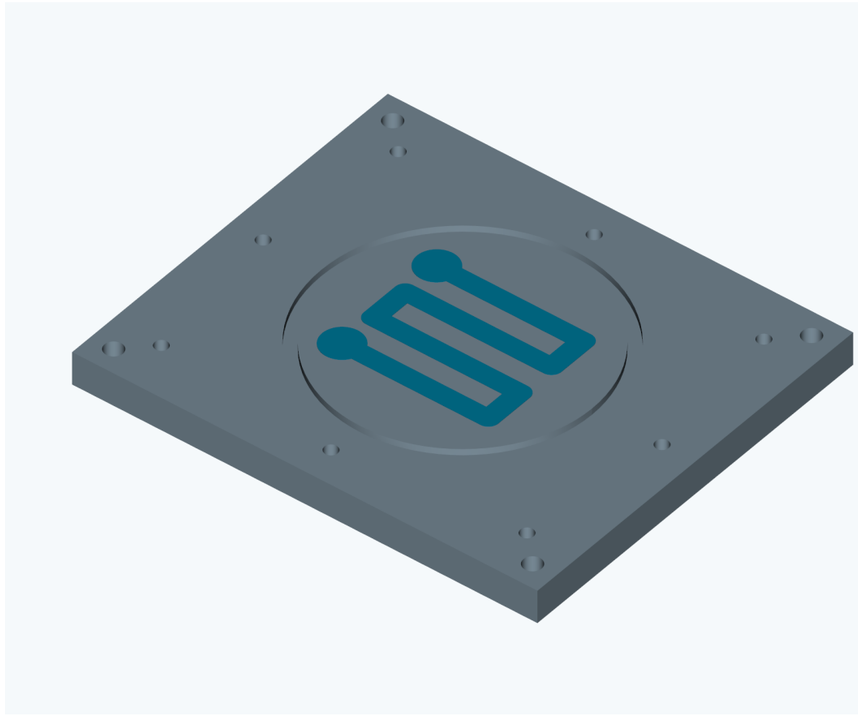

NOMINAL COOLANT DOMAIN / NTS

One connected four-pass route, 5.671 mL at nominal geometry.

ASSEMBLY LOGIC

Install a clean, lubricated-compatible O-ring without twisting. Lower the lid onto base sealing land S.

Register lid/base side datums in a fixture: maximum in-plane pattern displacement 0.10 mm, including rotation.

Tighten the eight screws in a crossing sequence with qualified preload; screw heads protrude about 1 mm.

Required local opening at the O-ring under operating load/temperature: <= 0.04 mm, including face error and deflection.

Use compatible coolant and bonded face-seal fittings. Thread pitch/washer details follow the selected fitting supplier.

Leak/pressure testing, preload selection and the loaded gap limit must be validated before service.

REFERENCE BILL OF MATERIALS

1 CP01-001 base / 6061-T6 / qty 1

2 CP01-002 lid / 6061-T6 / qty 1

3 ID80 × CS2.50 O-ring / assumed EPDM 70A / qty 1

4 M4 × 12 socket screws / steel / qty 8

2 × G1/8 face-seal fittings and chassis screws omitted.

Thread envelopes and seal shapes are simplified in CAD.

CP / 01 DATUM STRATEGY & TOLERANCE CHECKS

CP01-200 / inspection follows the functional interfaces

A / THERMAL CONTACT

The base underside sets Z and two tilts. Flatness 0.040 supports a thin thermal interface. The channel floor is controlled at basic Z6 from A, bounding the remaining metal thickness.

B / PRIMARY SIDE

The X0 side establishes X and rotation about Z after A is seated. Its perpendicularity to A supports repeatable fixture contact. Datum features are real machined planes.

C / END LOCATION

The Y0 side removes the last translation. All hole, port and channel locations use A|B|C. The lid repeats this plane-based strategy with its sealing underside as its own A.

SEAL SQUEEZE / WORST CASE

Assumed purchased O-ring: ID80.0 ±0.5; cross-section 2.50 ±0.08.

Groove depth = 1.90 ±0.03. Total assembled local opening g <= 0.04.

Nominal squeeze = (2.50 - 1.90) / 2.50 = 24.0%.

Minimum = [2.42 - (1.93 + 0.04)] / 2.42 = 18.6%.

Maximum = (2.58 - 1.87) / 2.58 = 27.5%.

Exact annular volume fill: 72.7% nominal; 65.7-80.6% worst range.

Fill includes ID/CS/groove tolerances and max floor-corner radius;

it excludes coolant swell and thermal volume change.

LID-HOLE MMC EXAMPLE

Ø4.50-4.70 hole, position Ø0.15 at MMC.

Virtual condition = 4.50 - 0.15 = Ø4.35.

At measured hole Ø4.62: bonus = 0.12.

Total allowed position = Ø0.27 (radial offset 0.135).

dx = 0.08, dy = 0.09 gives Ø0.241, which passes.

Fixed-fastener check: screw axis follows the projected zone.

0.10 base + 0.15 lid + 0.20 registration = 0.45 mm.

Available 4.50 - 4.00 = 0.50; 0.05 diametral margin.

INSPECTION PLAN

A and S faces	CMM/plate check unrestrained flatness; confirm thermal and seal finishes by profilometer.
A | B | C setup	Seat on A; locate against B; stop against C. Use datum simulation consistent with precedence.
Channel geometry	CMM scan walls/floors to basic path and Z6. Surface profile +/-0.10 gives 5.90 min floor.
Seal gland	Measure OD/width and local depth; verify corner radii, texture and clean, undamaged mouth edges.
Holes and threads	Check sizes and thread gauges; base M4 axes must satisfy the 8 mm projected position zone.
Assembly closure	Check side registration, loaded local opening and leakage using a qualified test procedure.

CP / 01

THERMAL BASIS & VERIFICATION

CP01-300 / a portfolio engineering study with explicit operating assumptions

REFERENCE CASE / INPUTS, NOT A DEMONSTRATED RATING

100 W over a centered 60 × 60 mm heat-source footprint; nominal 0.10 mm TIM beneath base A.

Reference coolant: liquid water at 30 °C, 1.0 L/min. Operating concept: 20-60 °C, 2 bar gauge maximum.

Assumed water properties: density 995.7 kg/m³, cp 4180 J/kg/K, dynamic viscosity 0.797 mPa·s.

Base/lid: 6061-T6, assumed thermal conductivity 167 W/m/K. No thermal or pressure performance test performed.

WHAT THE FIRST CALCULATIONS SAY

Bulk coolant rise = Q / (mass flow × cp) = 1.44 K at 100 W and 1.0 L/min.

Nominal straight-channel velocity = 0.694 m/s; hydraulic diameter = 4.80 mm; Reynolds number about 4,164.

This is near transition; a fully laminar heat-transfer/pressure-drop model would be a poor blanket assumption.

Ideal 1D floor conduction over the full source area: 0.006 / (167 × 0.060 × 0.060) = 0.0100 K/W.

That 1D floor term excludes spreading, TIM/contact resistance, convection and coolant maldistribution.

Conservative separating force at 2 bar over Ø85 = 1,135 N. This is not a bolt-preload or plate-deflection proof.

MANUFACTURING & GEOMETRIC CHECKS

Mill base A/B/C first; rough passages; stabilize/finish both plate faces; finish groove, channels and holes from datums.

Channel floor minimum = 6.00 - 0.10 = 5.90 mm. Adjacent straight-pass web minimum = 12 - 6 - 0.20 = 5.80 mm.

Nominal seal-inner-edge to terminal-pocket clearance = 38.90 - sqrt(22^2 + 18^2) - 6 = 4.47 mm.

Worst clearance exceeds 4.24 mm after groove width/OD, groove position and channel-profile allowances.

M4 screw engagement = 12 - (10 - 3) = 5.00 nominal; >= 4.70 with assumed screw length 12.0 ±0.2.

Blind thread drill terminates no deeper than 8.00 from S; minimum remaining metal to A = 1.95 mm.

Base/lid STEP solids valid; nominal coolant domain is one connected solid and does not intersect base metal.

REMAINING PHYSICAL VALIDATION

Confirm coolant/inhibitor and EPDM compound compatibility; bare aluminum corrosion and elastomer swell need review.

Qualify clamp preload, lid/base deflection, leakage, pressure drop, thermal performance and chassis-mount distortion.

The perimeter O-ring prevents external leakage; a bolted metal lid can allow inter-pass bypass across imperfect rib contact.

CFD should include a justified bypass-gap sensitivity; perfect-contact nominal channels alone may overpredict cooling.

PRIMARY DESIGN REFERENCES

ASME Y14.5-2018; Parker O-Ring Handbook ORD 5700, sections 3.6-3.7; Trelleborg O-Ring axial-gland tables.

Clickable sources, modeling limitations and full assumptions are supplied in README.md. All selected dimensions are project choices.