ASTER CP01 / ASSEMBLY & DRAWING INDEX

DRAFT TOLERANCE PROPOSAL - NOT FOR MANUFACTURE

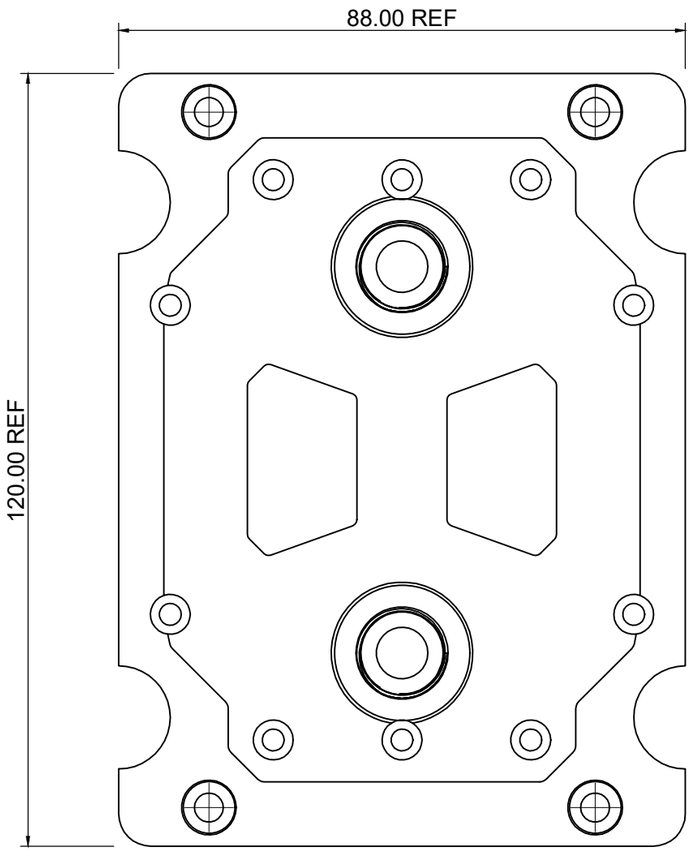

TOP ARRANGEMENT - HARDWARE SYMBOLIC

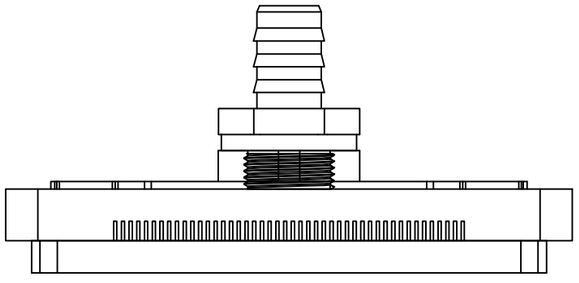

FRONT ARRANGEMENT / COINCIDENT FITTING OMITTED

ITEM	DESCRIPTION	QTY	SHEET
01	Copper fin base	1	02
02	Perimeter seal	1	06
03	Cover/manifold	1	03-04
04	M14 fitting	2	05
05	Fitting O-ring	2	06
06	Cover screw	10	07
07	Shoulder screw	4	08
08	Compression spring	4	09
09	Washer	8	10
10	Mating standoff	4	11

Total assembly: 37 separate solid parts.
No motherboard, CPU, backplate or hose included.
Sheet 12 records interface stacks and release holds.
All proposed GD&T uses RFS by default; no MMC bonus or datum shift is assigned.
Thread axes refer to pitch-cylinder axes. Thread grades and gauges need approval.
REF dimensions describe existing CAD and carry no acceptance tolerance.

DOCUMENT BASIS
Nominal dimensions: source CAD parameters and measured projections.
Tolerances and surface finishes: new engineering proposals.
This is a complete parts-coverage review set, not a complete manufacturing release.

Finish/material specification, pressure, torque and processor clamp-load limits remain open. Verify assembly fit after the datum scheme is approved.

Nominal CAD geometry is the source. All numerical tolerances on this sheet are proposed unless marked REF.

ASTER CP01 / COPPER FIN BASE

DRAFT TOLERANCE PROPOSAL - NOT FOR MANUFACTURE

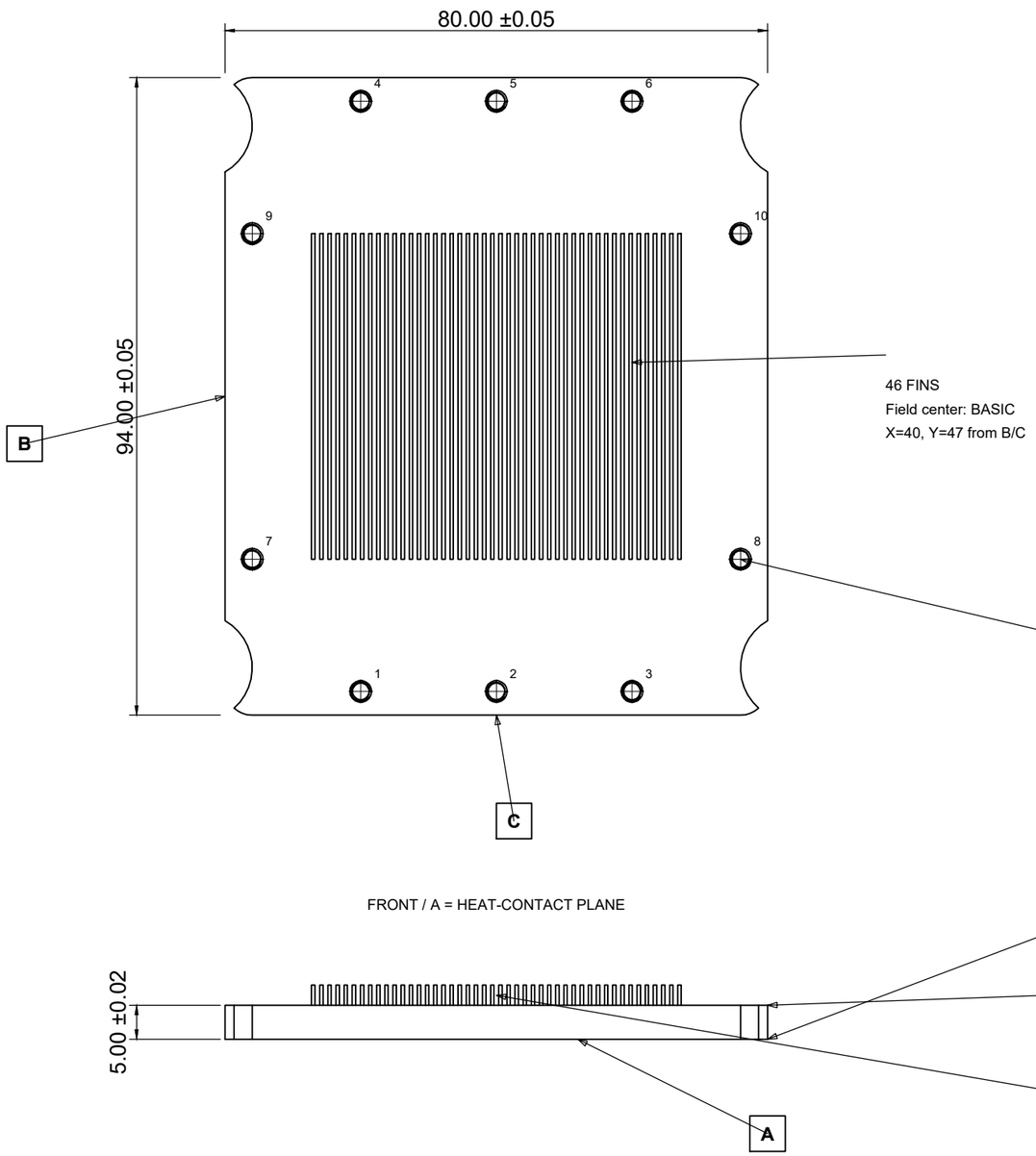

10 THREADED HOLES - X/Y BASIC FROM B/C

HOLE	X FROM B	Y FROM C
1	20.00	3.50
2	40.00	3.50
3	60.00	3.50
4	20.00	90.50
5	40.00	90.50
6	60.00	90.50
7	4.00	23.00
8	76.00	23.00
9	4.00	71.00
10	76.00	71.00

10X M3 x 0.5-6H THRU - proposed thread class.
Entry chamfer: existing 0.35 axial / Ø3.20 major REF.
Datum B: plane X=-40. Datum C: plane Y=-47.

B01 10 M3 pitch axes

⌖ | Ø0.10 | A | B | C

B02 Heat-contact face A

⏥ | 0.03

B03 Joint / seal-bearing deck

// | 0.03 | A

B04 46 fin side surfaces

⌓ | 0.10 | A | B | C

46 fins: 0.50 ±0.03 thickness; 1.20 BASIC pitch; 48.00 ±0.05 length. Fin height above deck: 3.00 ±0.02.
Heat face: Ra 0.8 µm proposed; seal-bearing deck: Ra 0.8 µm proposed. Copper alloy/temper and process TBD.

Nominal CAD geometry is the source. All numerical tolerances on this sheet are proposed unless marked REF.

ASTER CP01 / COVER / EXTERNAL FEATURES

DRAFT TOLERANCE PROPOSAL - NOT FOR MANUFACTURE

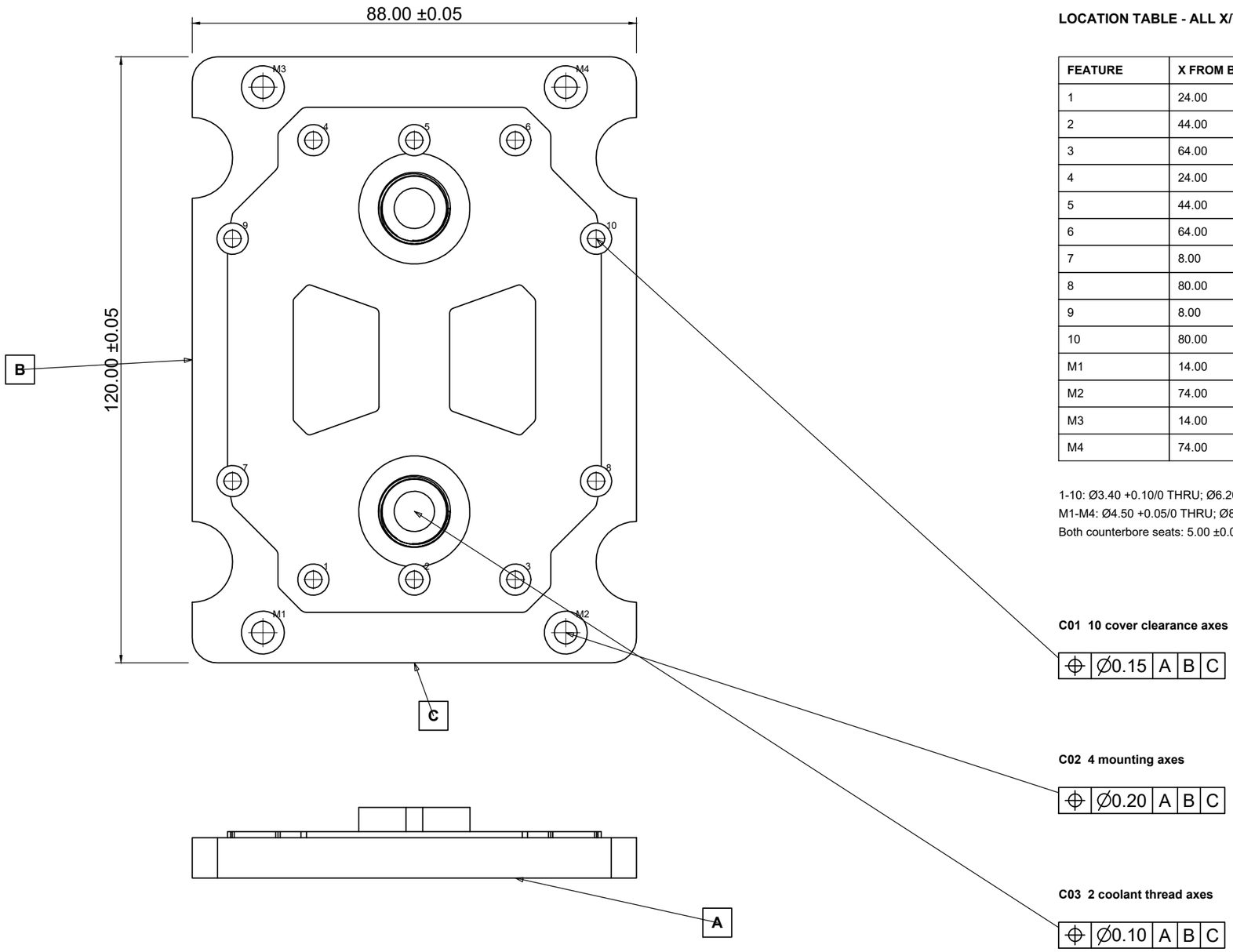

LOCATION TABLE - ALL X/Y BASIC

FEATURE	X FROM B	Y FROM C
1	24.00	16.50
2	44.00	16.50
3	64.00	16.50
4	24.00	103.50
5	44.00	103.50
6	64.00	103.50
7	8.00	36.00
8	80.00	36.00
9	8.00	84.00
10	80.00	84.00
M1	14.00	6.00
M2	74.00	6.00
M3	14.00	114.00
M4	74.00	114.00

1-10: Ø3.40 +0.10/0 THRU; Ø6.20 +0.10/0 counterbore.
M1-M4: Ø4.50 +0.05/0 THRU; Ø8.50 +0.10/0 counterbore.
Both counterbore seats: 5.00 ±0.03 above datum A.

C01 10 cover clearance axes

⌖	Ø0.15	A	B	C

C02 4 mounting axes

⌖	Ø0.20	A	B	C

C03 2 coolant thread axes

⌖	Ø0.10	A	B	C

P1/P2: 2X M14 x 1-6H RH; BASIC X=44, Y=30 / 90 from B/C. Datum A: underside joint plane (source Z=5).
Datum B: X=-44 side plane; C: Y=-60 end plane. Counterbores coaxial with their controlled through holes.

Nominal CAD geometry is the source. All numerical tolerances on this sheet are proposed unless marked REF.

ASTER CP01 / COVER / CAVITY & SEAL GLAND

DRAFT TOLERANCE PROPOSAL - NOT FOR MANUFACTURE

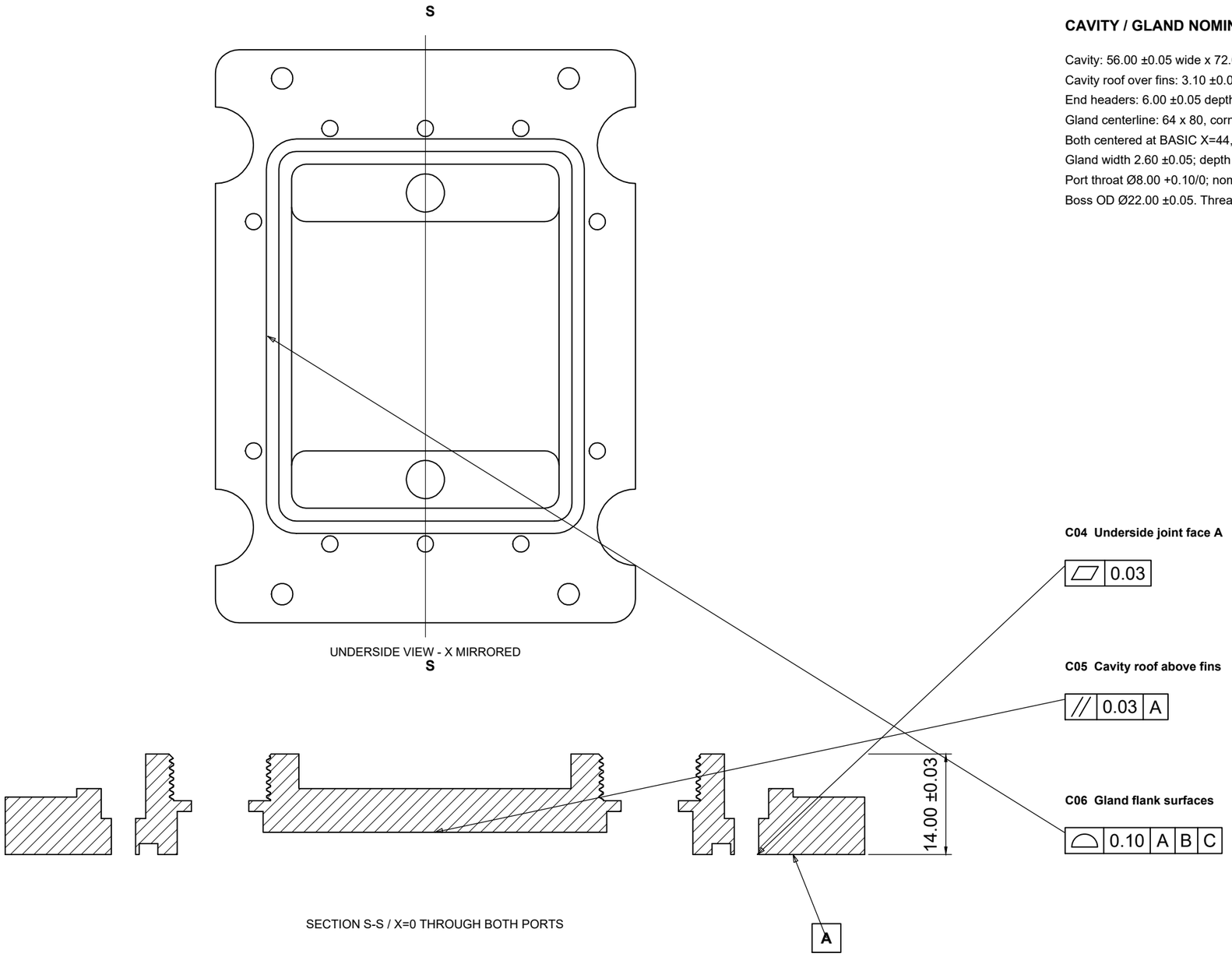

CAVITY / GLAND NOMINAL DEFINITION

Cavity: 56.00 ±0.05 wide x 72.00 ±0.05 long; corner R3.00 ±0.10.
Cavity roof over fins: 3.10 ±0.02 above A.
End headers: 6.00 ±0.05 depth from A.
Gland centerline: 64 x 80, corner R5 (BASIC).
Both centered at BASIC X=44, Y=60 from B/C.
Gland width 2.60 ±0.05; depth 1.50 ±0.03 from A.
Port throat Ø8.00 +0.10/0; nominal female thread length 6.50 REF.
Boss OD Ø22.00 ±0.05. Thread lead-in 0.65 axial / Ø14.30 major REF.

Seal-contact surfaces: Ra 0.8 µm proposed; remaining wetted surfaces: Ra 1.6 µm proposed. Remove burrs; protect sealing edges.
Datum B/C definitions on sheet 03 apply. Gland profile uses the nominal CAD as its BASIC shape. Inspect groove depth separately.

Nominal CAD geometry is the source. All numerical tolerances on this sheet are proposed unless marked REF.

ASTER CP01 / COOLANT FITTING

DRAFT TOLERANCE PROPOSAL - NOT FOR MANUFACTURE

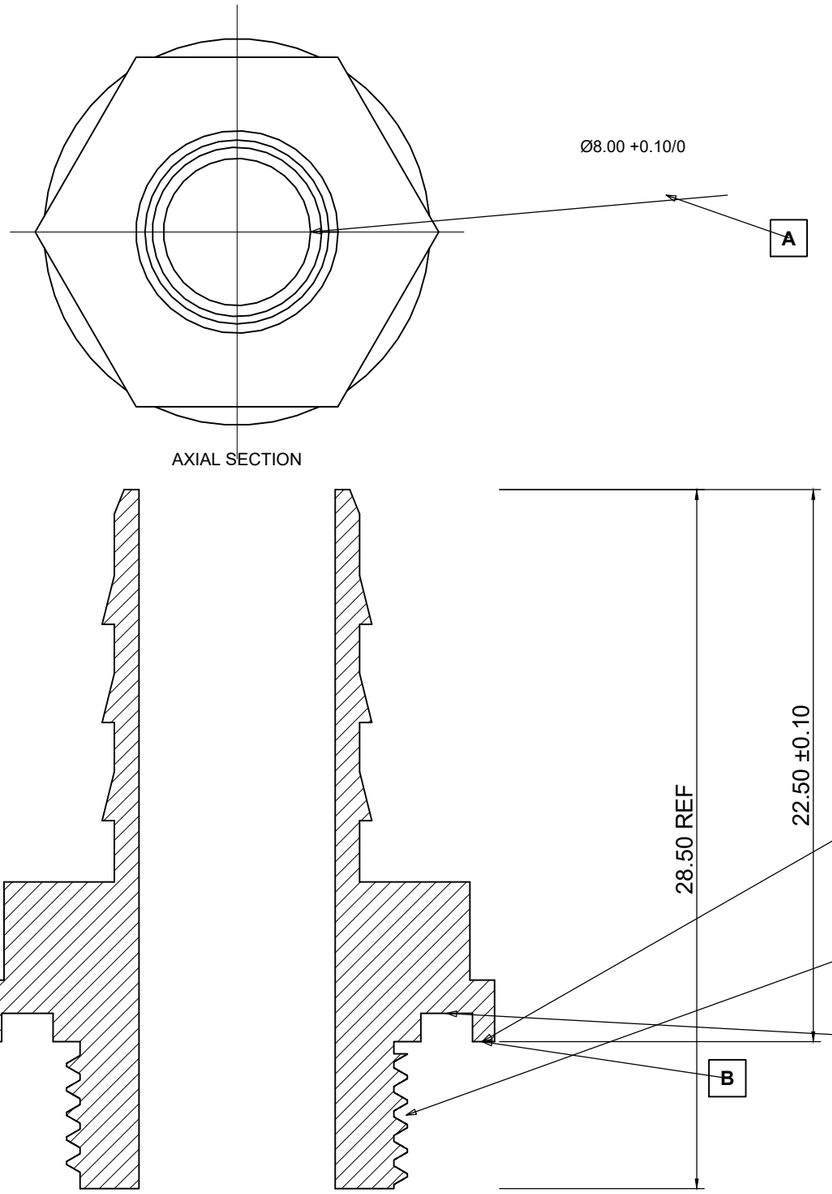

CUSTOM M14 FACE-SEAL CONNECTION

M14 x 1-6g RH proposed; 5.50 nominal thread length.
Stud projection below B: 6.00 ±0.05 (includes relief).
Ø8.00 +0.10/0 THRU bore; 19.00 ±0.05 AF hex.
Flange Ø21.00 ±0.05, thickness 2.50 ±0.05.
Gland: Ø15.00 ±0.05 inner; Ø19.20 ±0.05 outer.
Groove depth: 1.15 ±0.03 from B.
Hose tail: Ø10.00 NOM, 3X Ø11.00 NOM barbs. Tail/clamp interface is provisional.
Nickel-plated brass is material intent only; plating thickness and compatibility TBD.

F01 Flange sealing face B

⊥ | 0.03 | A

F02 Male thread pitch axis

⌖ | Ø0.05 | A

F03 Gland floor

// | 0.03 | B

Face B and gland floor: Ra 0.8 µm proposed.
Threads retain; O-ring seals. Not G1/4, NPT or a released ISO 6149 port.

Datum A = Ø8 through-bore axis. Datum B = flange sealing face (source Z=19).
Keep the continuous bore, hex, three hose barbs and male stud geometry. Hose/connector qualification remains open.

Nominal CAD geometry is the source. All numerical tolerances on this sheet are proposed unless marked REF.

ASTER CP01 / ELASTOMER SEALS

DRAFT TOLERANCE PROPOSAL - NOT FOR MANUFACTURE

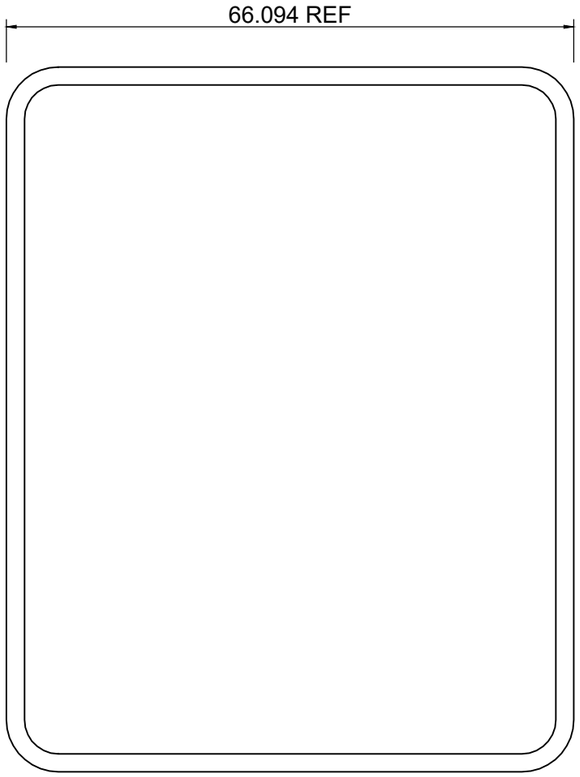

PERIMETER SEAL - COMPRESSED CAD ENVELOPE

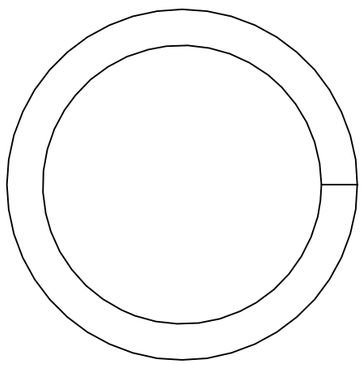

2X FITTING O-RINGS - COMPRESSED VIEW

Nominal CAD geometry is the source. All numerical tolerances on this sheet are proposed unless marked REF.

FREE STATE / INSTALLED STATE

Perimeter seal: nominal 2.00 mm free circular cord.
Centerline CAD envelope 64 x 80, corner R5 REF.
Installed axial height 1.50 REF; nominal squeeze 25%.
The 66.094 x 82.094 outline is a compressed volume envelope, not the procurement dimensions of a free gasket.

Fitting O-ring: nominal free ID 15.60 x 1.50 circular section. Installed height 1.15 REF; nominal squeeze 23.3%.
Compressed elliptical envelope OD 19.057 REF and ID 15.143 REF.

SUPPLIER DEFINITION REQUIRED

Compound, hardness, coolant/temperature compatibility, free seal perimeter/joint, tolerances and compression-set limits are TBD.
No rigid-part position or flatness controls are imposed on these flexible compressed envelopes.
The section-size ranges on sheet 12 are tolerance-study assumptions only, not procurement acceptance limits.
Inspect selected seals in their specified free condition; inspect installed squeeze from mating gland dimensions.

ASTER CP01 / COVER ASSEMBLY SCREW

DRAFT TOLERANCE PROPOSAL - NOT FOR MANUFACTURE

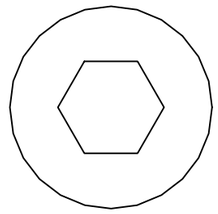

SOCKET 2.50 AF REF

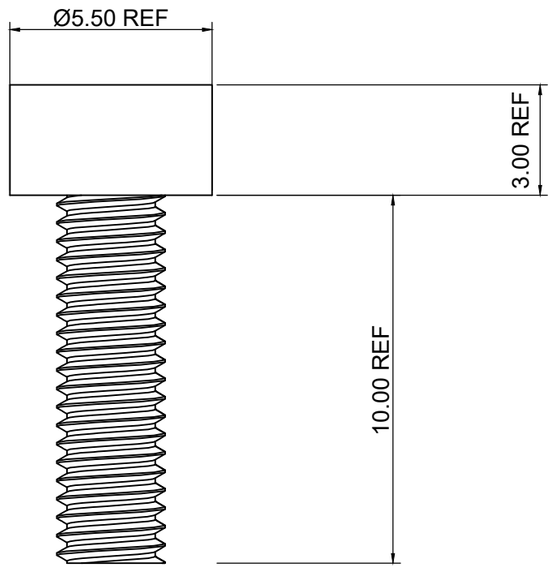

PURCHASED FASTENER DEFINITION

10X socket-head cap screw, M3 x 0.5 RH x 10 nominal under-head length.
Proposed external thread class: 6g.
Model head Ø5.5, height 3.0, socket 2.5 AF.
A catalog screw to an approved standard may replace this model after checking head, socket, strength, seating and thread engagement.
No separate custom-head GD&T is assigned before the supplier standard is selected. All shown head dimensions are REF.

Nominal engagement in the copper base: 5 mm. Modeled screw tip is flush with the heat-contact face. A production tolerance stack must prevent protrusion.
Fastener grade, tightening torque, locking method and copper thread stripping limits remain TBD.

Helical CAD profiles contain modeling simplifications. The approved thread callout and gauges must govern acceptance.
Before release: choose screw length tolerance and base thickness/engagement so no screw can protrude below the heat-contact face.

Nominal CAD geometry is the source. All numerical tolerances on this sheet are proposed unless marked REF.

ASTER CP01 / SPRING-MOUNT SHOULDER SCREW

DRAFT TOLERANCE PROPOSAL - NOT FOR MANUFACTURE

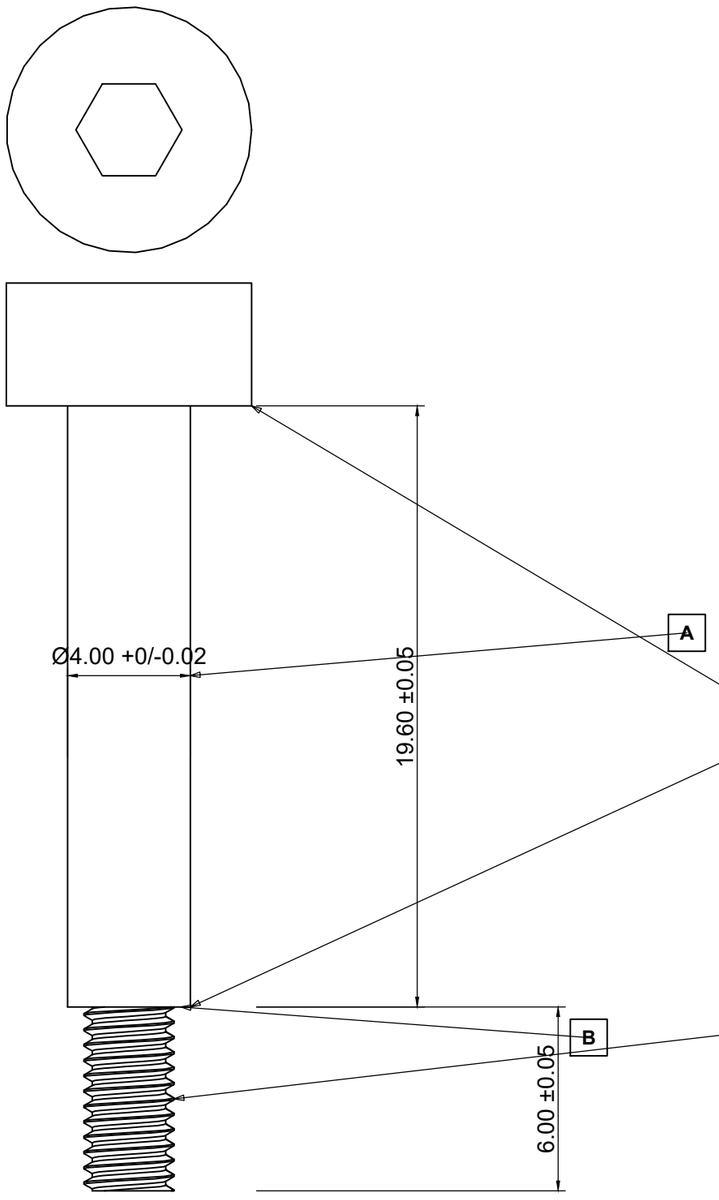

CUSTOM SHOULDER / STOP GEOMETRY

Datum A: Ø4 shoulder axis.
Datum B: shoulder stop face at source Z=4.
M3 x 0.5-6g RH tip - proposed class.
Head Ø8.00 ±0.05; head height 4.00 ±0.05.
Socket 3.00 AF nominal.
The shoulder seats on the mating standoff; the head compresses the spring through the upper washer.
Shoulder sliding surface: Ra 0.8 µm proposed.
Thread runout/relief, hardware grade and fatigue requirement must be finalized.

M01 Shoulder stop face B

⊥	0.02	A

M02 Under-head bearing face

//	0.03	B

M03 M3 pitch axis

⌖	Ø0.05	A

Spring installed-height stack uses the 19.60 shoulder length. Refer to sheet 12 before selecting any processor clamping load.
Do not tighten by compressing the spring to solid height; shoulder/standoff stop geometry defines the intended installed position.

Nominal CAD geometry is the source. All numerical tolerances on this sheet are proposed unless marked REF.

ASTER CP01 / COMPRESSION SPRING

DRAFT TOLERANCE PROPOSAL - NOT FOR MANUFACTURE

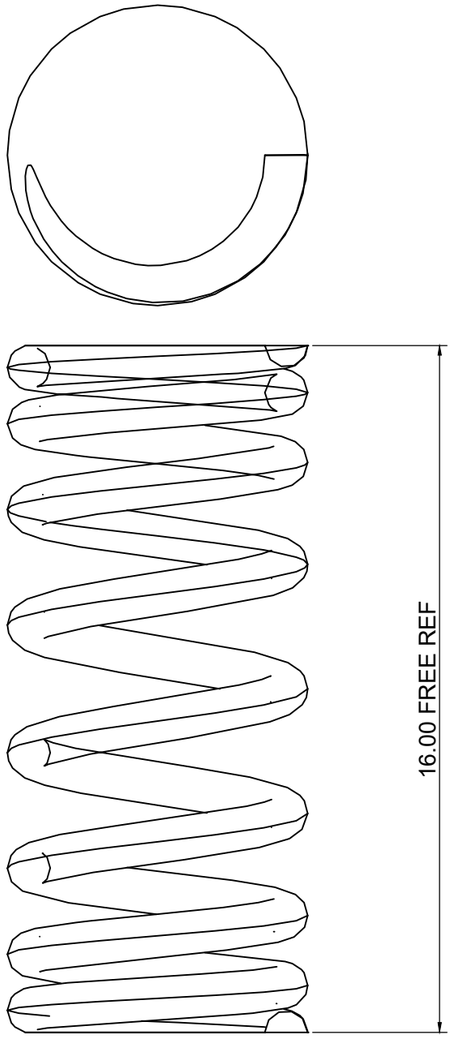

FREE STATE / CLOSED & GROUND END MODEL

SPRING SUPPLIER REVIEW DATA

Wire diameter 1.00 NOM; mean coil diameter 6.00 NOM.
Outside diameter 7.00 REF; inside diameter 5.00 REF.
Eight modeled total turns; approximately six active turns.
Free length 16.00 REF; installed length 12.00 REF.
Approximate solid height 8.00 REF.

Preliminary estimate only: rate 7.43 N/mm; force 29.7 N at 12 mm installed length; four-spring total about 118.8 N. These are not accepted clamp loads.

Supplier must define wire grade, rate/force tolerances, end squareness, free length, relaxation, cycle life and corrosion protection.
No numerical spring GD&T is released. Free-state geometry and an explicit inspection condition are required before assigning end-face controls.
Select springs against the approved processor/socket load window.

Nominal CAD geometry is the source. All numerical tolerances on this sheet are proposed unless marked REF.

ASTER CP01 / MOUNTING WASHER

DRAFT TOLERANCE PROPOSAL - NOT FOR MANUFACTURE

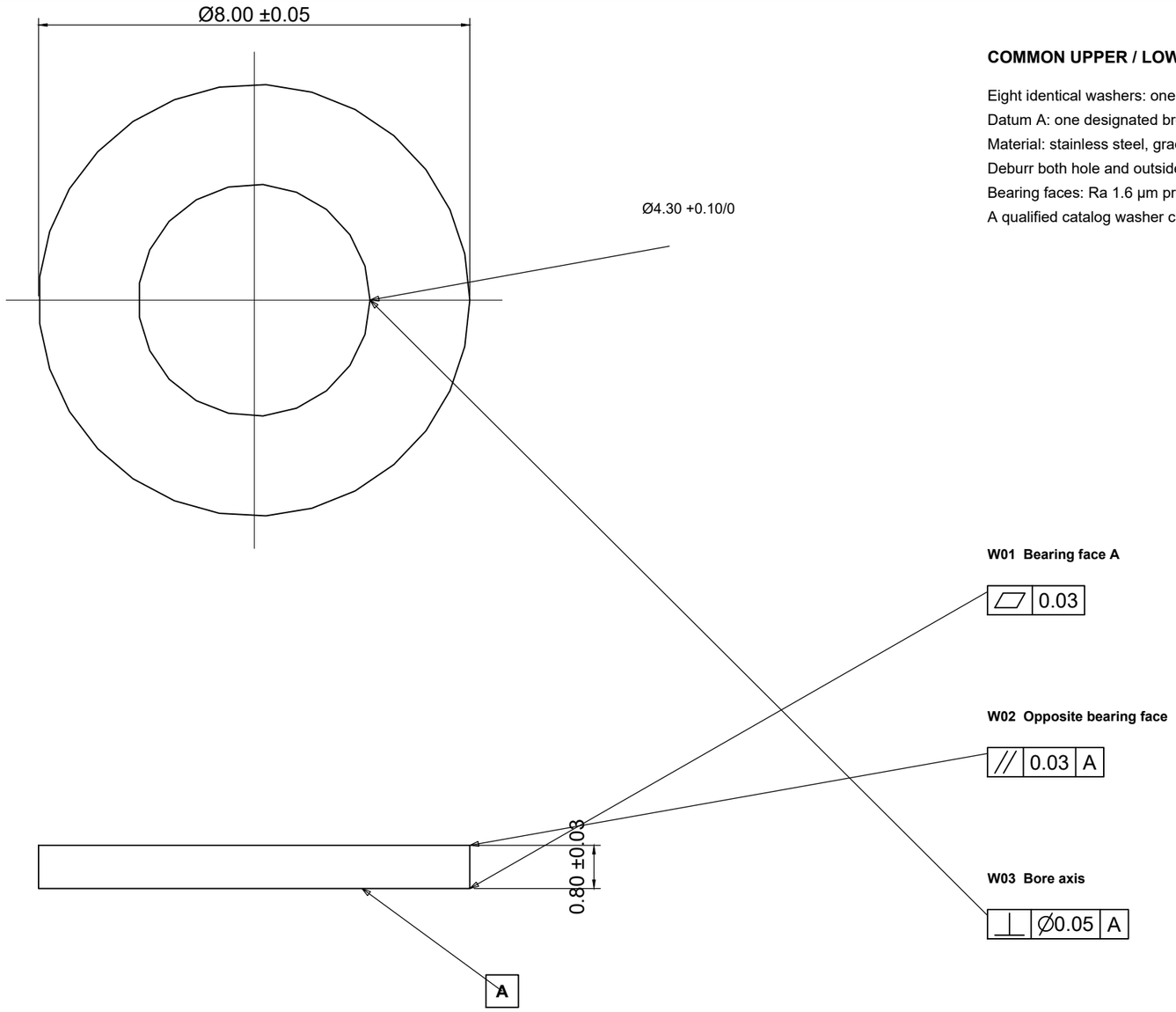

COMMON UPPER / LOWER WASHER

Eight identical washers: one above and one below each spring.
Datum A: one designated broad bearing face.
Material: stainless steel, grade TBD.
Deburr both hole and outside edges; no burrs on bearing faces. Edge break 0.05-0.10 proposed.
Bearing faces: Ra 1.6 µm proposed.
A qualified catalog washer can replace this geometry after checking OD, ID, thickness and bearing quality.

Nominal CAD geometry is the source. All numerical tolerances on this sheet are proposed unless marked REF.

ASTER CP01 / MATING STANDOFF

DRAFT TOLERANCE PROPOSAL - NOT FOR MANUFACTURE

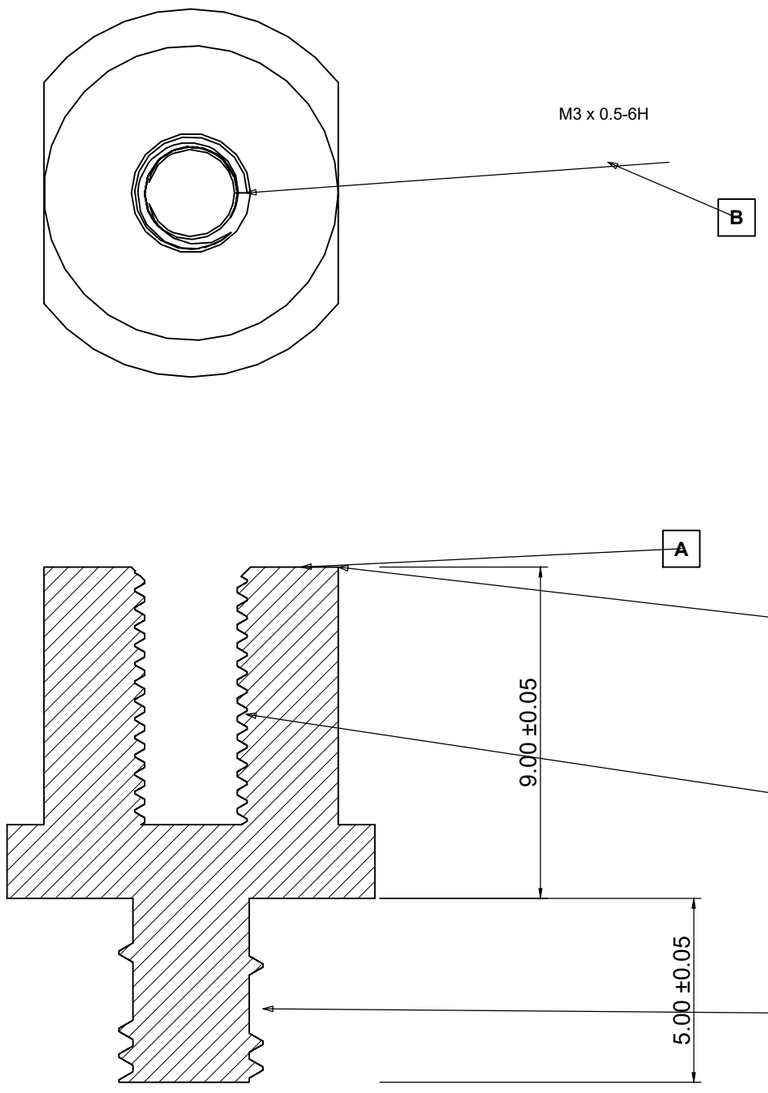

AXIAL SECTION / X=0

S01 Upper stop face A

⏥ 0.03

S02 Upper M3 pitch axis

⊥ ∅0.05 A

S03 Lower M4 pitch axis

⌖ ∅0.05 A B

PROVISIONAL SUPPORT / BACKPLATE ITEM

Datum A: upper shoulder-stop face.
Datum B: upper M3 pitch-cylinder axis.
M3 x 0.5-6H RH internal; 6 MIN useful thread proposed. Hole envelope 7.00 REF from A.
M4 x 0.7-6g RH lower stud, 5.00 nominal projection.
Body Ø8.00 ±0.05. Flange Ø10.00 ±0.05 with 8.00 ±0.05 across wrench flats; flange 2.00 ±0.05 thick.
Steel grade, coating, drilling runout/point and support-plane interface TBD.

This standoff is not a verified motherboard/backplate fitting. Final height and lower attachment must follow the selected board stack.
Maintain usable M3 engagement, tip clearance and a positive shoulder stop; do not infer blind-drill manufacturing detail from the CAD helix.

Nominal CAD geometry is the source. All numerical tolerances on this sheet are proposed unless marked REF.

ASTER CP01 / TOLERANCE STACKS & RELEASE HOLDS

DRAFT TOLERANCE PROPOSAL - NOT FOR MANUFACTURE

SIZE-ONLY STUDIES - ASSUMPTIONS ARE NOT RELEASED LIMITS

Interface	Nominal	Assumed ranges / result
Fin-to-roof gap	3.10 - 3.00 = 0.10	±0.02 each -> 0.06 to 0.14 mm
Perimeter squeeze	1 - 1.50 / 2.00 = 25%	Cord 2.00 ±0.08; depth 1.50 ±0.03 -> 20.3-29.3%
Fitting O-ring squeeze	1 - 1.15 / 1.50 = 23.3%	Section 1.50 ±0.05; depth 1.15 ±0.03 -> 18.6-27.7%
Spring installed height	19.60 - (10-4) - 2(0.80)	12.00 mm nominal; support/cover stack TBD
M3 cover screw tip	5 base + 5 cover - 10 screw	0 nominal margin; protrusion risk not resolved

These arithmetic studies omit clamping deformation, local form error, thermal expansion, coating buildup, seal swelling and supplier distributions. They do not certify fit, leakage or processor load. The existing 0.10 mm fin clearance and flush cover-screw tips require explicit review before manufacturing release.

REQUIRED BEFORE MANUFACTURING RELEASE

1. Approve the datum scheme and the individual tolerances with the machining/inspection supplier. Confirm access to datum faces and pitch-axis gauges.
2. Resolve base/cover lateral registration: clearance screws provide clamping but do not establish a precision locating interface.
3. Select copper alloy/temper, fitting material/coating, fastener grades, spring specification and seal compound.
4. Specify coolant, operating/proof pressure, temperature range, hose/connector and leak acceptance criteria.
5. Specify processor/socket/backplate geometry and minimum/maximum clamp loads; finish the spring/standoff stack.
6. Complete thread stripping, cover deflection, contact, fatigue and pressure/leak qualification.
7. Finalize all free-seal procurement dimensions, thread runouts, blind-hole drill details, tooling radii and remaining surface finishes.

PROPOSED GENERAL RULE: unspecified rigid-part linear dimensions ±0.10 mm, angles ±0.5°. REF dimensions and flexible/purchased items are excluded. Specific tolerances and feature-control frames take precedence. Undimensioned external decorative contour follows the supplied CAD for review only; it is not released by this general rule.

DRAWING CONTENT: projected CAD curves, native AutoCAD DIMENSION and TOLERANCE entities, datum labels and basic hole tables.
This review set covers every assembly part type, but it is not a fully detailed or approved production drawing set.

Nominal CAD geometry is the source. All numerical tolerances on this sheet are proposed unless marked REF.